www.freeservicemanuals.info

ORDER NO. VRD8701104

Service Manual

Video Cassette Recorder

General Description
Adjustment Procedures
Block / Schematic Diagrams
Exploded Views / Parts List

Panasonic VHS HQ
PAL

NV-G21 EG B EO EV

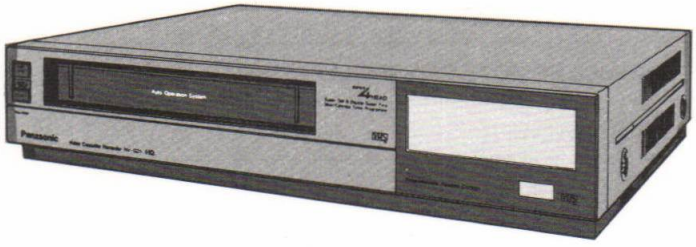

SPECIFICATIONS

ITEM	SPECIFICATION		ITEM	SPECIFICATION
POWER	SOURCE: 220 V 50/60 Hz (NV-G21EG/EO/EV) 240 V 50/60 Hz (NV-G21B)		VIDEO	OUTPUT: VIDEO OUT Connector (BNC type) 1.0 Vp-p, 75Ω terminated (NV-G21B) EURO AV Connector (21 pin) 1.0 Vp-p, 75Ω terminated (NV-G21EG/EO/EV)
	CONSUMPTION: 25 watts (NV-G21EG/EO/EV) 22 watts (NV-G21B)		AUDIO	HEAD: 1 Stationary head
RECORDING SYSTEM	2 rotary heads, helical scanning system			INPUT: AUDIO IN Connector (Phono type) More than −10 dBV (316 mV), more than 50 kΩ EURO AV Connector (21 pin) More than −10 dBV (316 mV), more than 10 kΩ (NV-G21EG/EO/EV)
	PAL			OUTPUT: AUDIO OUT Connector (Phono type) −8 dBV (400 mV), Less than 1 kΩ (NV-G21B) EURO AV Connector (21 pin) −6 dBV (500 mV), Less than 1 kΩ (NV-G21EG/EO/EV)
TV TUNER SYSTEM	NV-G21EG	VHF: CH E2 ~ CH S41 (PAL/SECAM B) 75Ω unbalanced UHF: CH 21 ~ CH 69 (PAL/SECAM G) 75Ω unbalanced	TAPE FORMAT	VHS Cassette tape (Tape width 12.7 mm)
	NV-G21B	UHF: CH 21 ~ CH 69 (PAL I) 75Ω unbalanced	TAPE SPEED	23.39 mm/s Record/Playback Time: 4 hours with 240 min. type tape FF/REW Time 5.5 min. with 180 min. type tape
	NV-G21EO/EV	VHF: CH E2 ~ CH U10 (PAL B) 75Ω unbalanced UHF: CH 21 ~ CH 69 (PAL G) 75Ω unbalanced	DIMENSIONS	380(W) × 82(H) × 342(D) mm
RF OUT SYSTEM	UHF: CH36 ± 4 (PAL G) 73^{+2}_{-3} dBμ, 75Ω terminated (NV-G21EG) CH36 ± 4 (PAL I) 73 ± 3 dBμ, 75Ω terminated (NV-G21B) CH36 ± 4 (PAL G) 70^{+2}_{-3} dBμ, 75Ω terminated (NV-G21EO/EV)		WEIGHT	4.9 kg
VIDEO	HEADS: 4 rotary heads 1 pair for recording and playback (L-R heads) 1 pair for video trick play with L′ and R′ heads (field still and fine slow)		STANDARD ACCESSORIES	1 PC. DIN-RF Cable 1 PC. Infra-red remote controler 1 PC. Digital Scanner 1 PC. Programme Sheet 1 PC. AC Cord
	INPUT: VIDEO IN CONNECTOR (BNC type) 1.0 Vp-p, 75Ω terminated EURO AV Connector (21 pin) 1.0 Vp-p, 75Ω terminated (NV-G21EG/EO/EV)		OPTIONAL ACCESSORIES	VPS Decoder, VW-VPS1 (NV-G21EO)

Weight and dimensions shown are approximate.
Specifications are subject to change without notice.

Panasonic

Matsushita Electric Trading Co., Ltd.
P.O. Box 288, Central Osaka Japan

www.freeservicemanuals.info

INTRODUCTION

This service manual contains technical information which will allow service technician to understand and service this model.

Section 1 presents you with some general information of features and controls, enabling you to become familiar with each function.

Section 2 contributes to your mechanical and electrical adjustment as well disassembly and replacement procedures.

In the case of very common information relating to other models like mechanical adjustments, please refer to each service manual.

Section 3 contains block diagrams which offers you information for checking and understanding each circuit. Schematic diagrams which give you detailed information such as waveforms, voltage data, function e.t.c. ...

Section 4 contains exploded views and parts list.

Please place orders using the parts list and not the drawing reference numbers.

If the circuit is changed or modified, this information will be followed by supplementary service manual to be filed with original service manual.

CONTENTS

TECHNICAL INFORMATION

SECTION 1

GENERAL DESCRIPTIONS 1-1
1-1. FEATURES 1-1
1-2. CONTROLS & COMPONENTS 1-2

SECTION 2

ADJUSTMENT PROCEDURES 2-1
2-1. MECHANICAL ADJUSTMENT PROCEDURES 2-1
2-2. DISASSEMBLY METHOD 2-1
2-3. REPLACEMENT OF THE CYLINDER UNIT 2-4
2-4. ELECTRICAL ADJUSTMENT PROCEDURES 2-6

SECTION 3

BLOCK DIAGRAMS & SCHEMATIC DIAGRAMS 3-1
3-1. SYSTEM CONTROL BLOCK DIAGRAM 3-1
3-2. SERVO BLOCK DIAGRAM 3-2
3-3. LUMINANCE & CHROMINANCE BLOCK DIAGRAM 3-3
3-4. MAIN C.B.A. 3-4
3-5. POWER SCHEMATIC DIAGRAM 3-5
3-6. POWER C.B.A. 3-5
3-7. SYSTEM CONTROL SCHEMATIC DIAGRAM 3-6
3-8. SYSTEM CONTROL Section In Main C.B.A. 3-7
3-9. SERVO SCHEMATIC DIAGRAM 3-8
3-10. SERVO Section In Main C.B.A. 3-9
3-11. SERVO PACK C.B.A. 3-9
3-12. SUB SERVO (1) PACK C.B.A. 3-9
3-13. CYLINDER DRIVE C.B.A. 3-9
3-14. SUB SERVO (2) PACK C.B.A. 3-9
3-15. LUMINANCE & CHROMINANCE SCHEMATIC DIAGRAM 3-10
3-16. LUMINANCE & CHROMINANCE PACK SCHEMATIC DIAGRAM 3-10
3-17. LUMINANCE & CHROMINANCE Section In Main C.B.A. 3-11
3-18. LUMINANCE & CHROMINANCE PACK C.B.A. 3-11
3-19. SECAM PACK C.B.A. 3-11

www.freeservicemanuals.info

3-20. INPUT SELECT PACK & SUB INPUT SELECT PACK SCHEMATIC DIAGRAM (NV-G21EG/EO/EV)... 3-12
3-21. INPUT SELECT PACK C.B.A. & SUB INPUT SELECT PACK C.B.A. (NV-G21EG/EO/EV)... 3-12
3-22. INPUT SELECT PACK SCHEMATIC DIAGRAM (NV-G21B)... 3-13
3-23. INPUT SELECT PACK C.B.A. (NV-G21B)... 3-13
3-24. HEAD AMP PACK SCHEMATIC DIAGRAM... 3-14
3-25. HEAD AMP PACK C.B.A.... 3-14
3-26. AUDIO SCHEMATIC DIAGRAM... 3-15
3-27. AUDIO Section In Main C.B.A.... 3-15
3-28. OPERATION SCHEMATIC DIAGRAM... 3-16
3-29. OPERATION C.B.A.... 3-16
3-30. CH SELECT INTERFACE SCHEMATIC DIAGRAM... 3-16
3-31. CH SELECT INTERFACE Section In Main C.B.A.... 3-16
3-32. BUZZER PACK C.B.A.... 3-16
3-33. CH SELECT SCHEMATIC DIAGRAM (NV-G21EG)... 3-17
3-34. CH SELECT C.B.A. (NV-G21EG)... 3-17
3-35. CH SELECT SCHEMATIC DIAGRAM (NV-G21B/EO/EV)... 3-18
3-36. CH SELECT C.B.A. (NV-G21B/EO/EV)... 3-18
3-37. TIMER C.B.A.... 3-19
3-38. TIMER SCHEMATIC DIAGRAM... 3-19
3-39. TV DEMODULATOR PACK & TUNER/ARU PACK SCHEMATIC DIAGRAM (NV-G21EG)... 3-20
3-40. TV DEMODULATOR PACK C.B.A. & TUNER/ARU PACK C.B.A. (NV-G21EG)... 3-20
3-41. TV DEMODULATOR PACK & TUNER/ARU PACK SCHEMATIC DIAGRAM (NV-G21B)... 3-20
3-42. TV DEMODULATOR PACK C.B.A. & TUNER/ARU PACK C.B.A. (NV-G21B)... 3-21
3-43. TV DEMODULATOR PACK & TUNER/ARU PACK SCHEMATIC DIAGRAM (NV-G21EO/EV)... 3-21
3-44. TV DEMODULATOR PACK C.B.A. & TUNER/ARU PACK C.B.A. (NV-G21EO/EV)... 3-21
3-45. VPS SCHEMATIC DIAGRAM (NV-G21EG/EV)/(VW-VPS1/OPTION: NV-G21EO)... 3-22
3-46. VPS C.B.A. (NV-G21EG/EV)/(VW-VPS1/OPTION: NV-G21EO)... 3-22
3-47. RF CONVERTER SCHEMATIC DIAGRAM (NV-G21EG)... 3-22
3-48. RF CONVERTER C.B.A. (NV-G21EG)... 3-22
3-49. RF CONVERTER SCHEMATIC DIAGRAM (NV-G21B)... 3-23
3-50. RF CONVERTER C.B.A. (NV-G21B)... 3-23
3-51. RF CONVERTER SCHEMATIC DIAGRAM (NV-G21EO/EV)... 3-23
3-52. RF CONVERTER C.B.A. (NV-G21EO/EV)... 3-23
3-53. DIGITAL SCANNER SCHEMATIC DIAGRAM... 3-24
3-54. DIGITAL SCANNER C.B.A.... 3-24
3-55. PROGRAMMABLE REMOTE CONTROL UNIT SCHEMATIC DIAGRAM... 3-25
3-56. PROGRAMMABLE REMOTE CONTROL UNIT C.B.A.... 3-25
3-57. CIRCUIT BOARD LAYOUT... 3-26
3-58. INTERCONNECTION SCHEMATIC DIAGRAM... 3-27
3-59. ICs & TRs INFORMATION... 3-28

SECTION 4

EXPLODED VIEWS & PARTS LIST... 4-1
4-1. EXPLODED VIEWS... 4-1
1. CHASSIS PARTS SECTION (1)... 4-1
2. CHASSIS PARTS SECTION (2)... 4-2
3. CASSETTE UP MECHANISM SECTION... 4-3
4. CASING PARTS SECTION... 4-4
5. PACKING PARTS SECTION... 4-5
6. PROGRAMMABLE REMOTE CONTROL UNIT... 4-6
7. DIGITAL SCANNER... 4-7
MECHANICAL REPLACEMENT PARTS LIST
ELECTRICAL REPLACEMENT PARTS LIST

www.freeservicemanuals.info

Technical Information

Subject: How To Make Easier Servicing

1. How To Install the VPS (VW-VPS1) C.B.A. (NV-G21EO)

For the installation of the VPS-Decoder, it has to be paid attention to the following points.

1. Make sure that the VTR mains cord is disconnected from the mains outlet.
2. Cut the jumper wire (W17) at both ends.
3. Unfasten the two screws and remove the top panel.
4. Insert the VPS Decoder into the slot, fix it with the screw, and attach the two connecotors.
5. Reassemble the VTR.

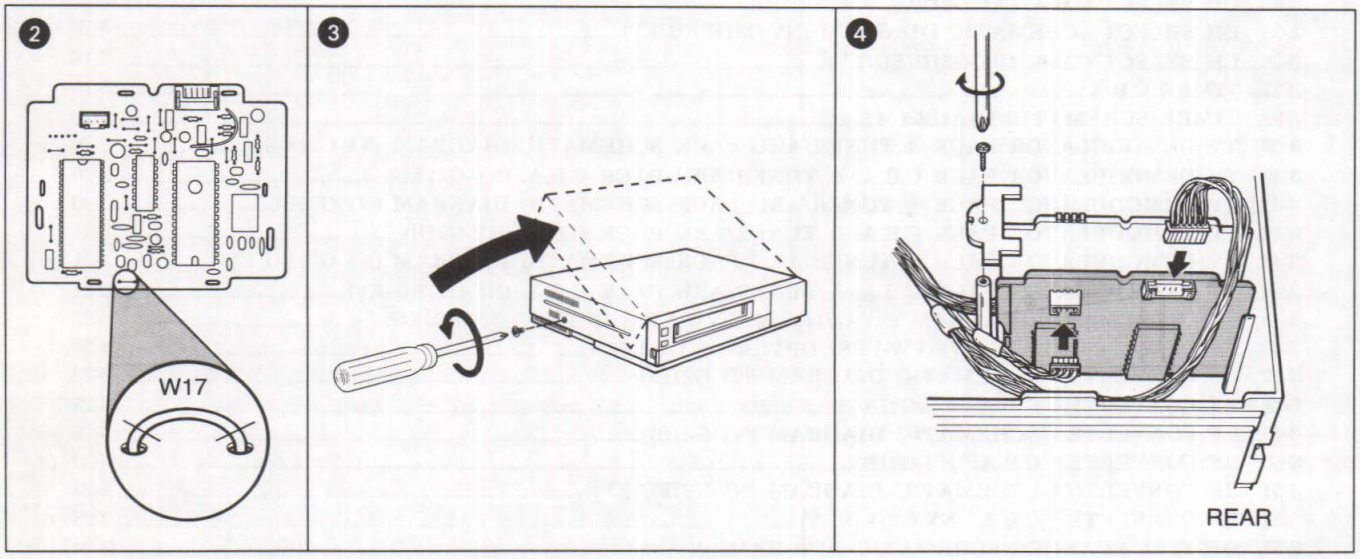

Fig. 1

2. How To Make Easier Servicing of A Packed Circuit

In case of the paeked circuit such as Luminance/Chrominance , Servo , CH select and so on, you may check easily by standing Main C.B.A as shown in Fig. 2.

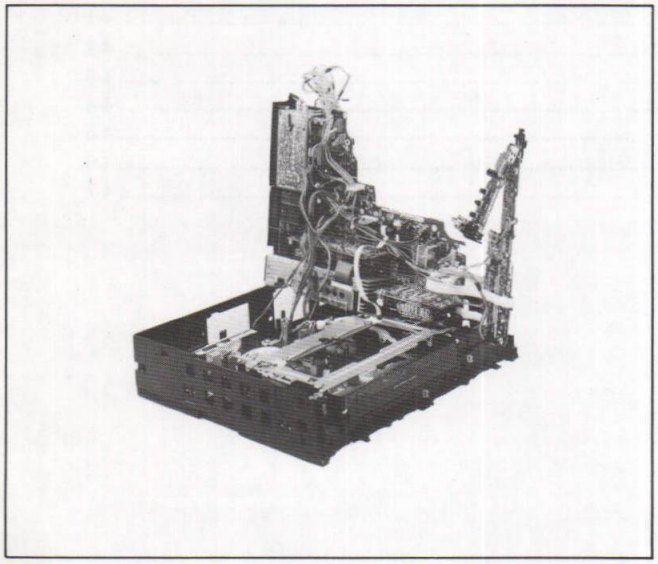

Fig. 2

3. How To Check or Replace The Timer Circuit

When checking or replacing the Timer circuit, the following steps should be followed to protect this circuit.

(1) Disconnect the AC mains.
(2) Make a short circuit at C7518 by connecting a wire to both lead wires of the C7518.
(3) Check or replace the parts.
(4) After checking or replacing the parts, remove the short circuit from C7518.

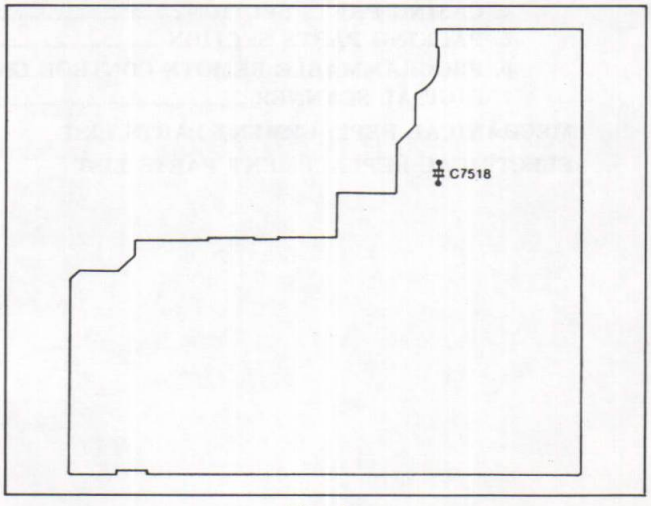

Fig. 3

www.freeservicemanuals.info

SECTION 1
GENERAL DESCRIPTIONS

1-1. FEATURES

1. Slim Design and Front Loading System

This highly functional design allows loading the video cassette from the front, thus minimizing the space required for the placement.

2. Multi-Function Display

Whenever an operation button is pressed, the activated function is immediately indicated on this easy-to-see display. It shows you at a glance, in what operation mode the VTR is functioning.

3. Programmable Remote Controller (Infra-red)

In addition to letting you control all major VTR functions,this handy Remote Controller also let you program timer recordings from the comfort of your armchair.

4. Picture Sharpness Control

With this control, the contours of the playback picture can be made sharper or softer.

5. VPS (Video Programme System)

The Video Programme System is an extremely convenient system which assures that the TV programmes you have programmed for timer recording will be record exactly from beginning to end,even if the actual broadcasting time is different from the scheduled time.
NV-G21EO:
The VPS function becomes operative when the VTR is equipped with the optional VPS decoder (VW-VPS1).
Refer to Technical Information of this Service Manual for how to equip the VPS decoder.

6. Super Still, Super Still Advance and Super Fine Slow Playback

Super Still,Super Still Advance and Double Fine Slow Playback are possible with superb picture quality with minimum noise and jitter.

7. Super OTR Function (One-Touch Timer Recording)

This convenient function makes it possible to easily programme the VTR for recording of TV programmes with immediate start or with start within 24 hours and with the starting time and ending time precisely to the minute, and the VTR will automatically turn itself off when the recording ends.

8. Auto Operation

This VTR automatically turns itself on when a video cassette is inserted even if it was turned off. When the tab of the inserted cassette is broken out, playback will start automatically. Also, even if the VTR is off, when the Eject Button is pressed, it automatically turns itself to eject the cassette tape and turns itself off again.
When a video cassette tape with a broken out tab is inserted and the VTR is switched over to recording, OTR and timer recording, the cassette tape will be automatically ejected.
When the tape reaches its end (except during OTR and timer recording), it will automatically rewind to the beginning.

9. 1-Month Calender Timer

The clock/timer of the NV-G21 is programmed with the calendar up to the end of 2001. Therefore it knows exactly what day of the week it is on any given date. Programming of as many as 8 timer recordings is possible up to one month in advance.
In addition, easy programming of the timer recordings is possible both on the VTR itself and via the remote control unit.

10. Real Time Counter

The new Real Time Counter is a great improvement over the approximate counter systems of conventional VTRs. It gives you an exact reading of the elapsed tape time in hours, minutes and seconds, and makes it easy to calculate the tape time left on a cassette.

11. Reception of up to 32 TV Stations

The built-in tuner is this video recorder allows pretuning of 32 TV stations. So this VTR can accommodate virtually any increase in available TV programmes in the future.

12. HQ (High Quality) Picture System

Video recorders carrying the HQ symbol mark feature the new VHS High Quality Picture System. This system assures complete compatibility with VTRs that use the conventional VHS system.

13. Timer Programming by Bar Code Reading

Timer recordings are easily programmed by using the Degital Scanner, the pen-shaped reader to read bar codes containing the channel number, day, start time, and end time from the special data sheet, and then transferring the information to the VTR, which automatically enters the timer standby mode.

www.freeservicemanuals.info

1-2. CONTROLS AND COMPONENTS

FRONT

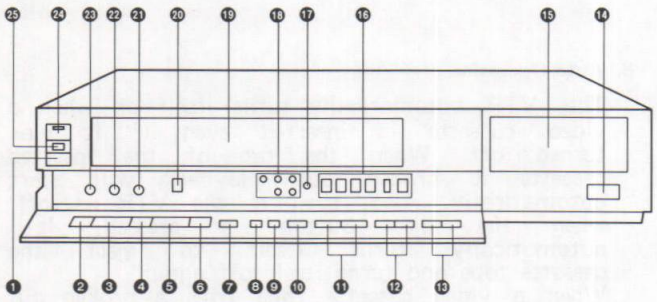

1. **Eject Button (▲)**
2. **Rewind ◀◀/Review ◀◀ Button**
3. **Play Button (▶)**
4. **Fast Forward ▶▶/Cue ▶▶ Button**
5. **Stop Button (■)**
6. **Pause/Still Button (■■)**
7. **Record Button (●)**
8. **Reset Button**
9. **Memory/Search Lock Button**

   When this button is pressed once, the Memory Indicator "M" will light up, and when it is pressed one more time, the Search Indicator "S" will appear instead.
   When it is pressed a third time the Search Indicator "S" will disappear.

10. **Euro AV Button (NV-G21EO/EG/EV)**
11. **Channel Selection Up and Down Buttons**
12. **OTR On Button**
13. **OTR Off Button**
14. **Remote Control Receiver**
15. **Multi-Function Display**

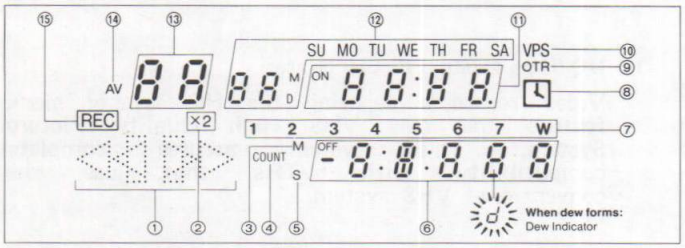

① Tape Running Display
② Double Speed Indicator
③ Memory Indicator
④ Tape Counter Indicator
⑤ Search Lock Indicator
⑥ Tape Counter Display
⑦ Timer Programme Number
⑧ Timer Recording Indicator
⑨ OTR Indicator
⑩ VPS Indicator
⑪ Clock Display
⑫ Date Display
⑬ Channel Display
⑭ Euro AV Indicator (NV-G21EO/EG/EV)
⑮ Recording Indicator

16. **Timer Recording**
17. **Clock Button**
18. **Tuner Controls**
19. **Cassette Compartment**
20. **Edit Switch**

    Set this switch to "ON" When you make dubbing (copying).
    Set this switch to "OFF" when normal use.

21. **Picture Sharpness Control**

    With this control, the contours of the playback picture can be made sharper or softer.

22. **Slow Tracking Control**

    When noise bars appear during Field still, Field Advance of Double Fine Slow playback, switch over to slow playback and turn the slow tracking control to the clockwise or counter clockwise to reduce the noise bars.
    Then resume the required mode.
    It may not be possible to eliminate the noise bars completely.

23. **Tracking Control**

    Tapes recorded on another machine may show noisy or a streaky playback picture,rotate this control slowly in either direction until the picture is clear.
    The control should normally be kept in the "FIX" position.

24. **VTR On/Off Switch with Indicator**
25. **Cassette-in Indicator**

REAR

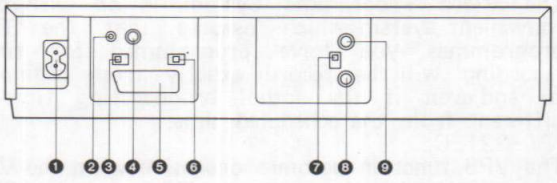

(NV-G21EG/EO/EV)

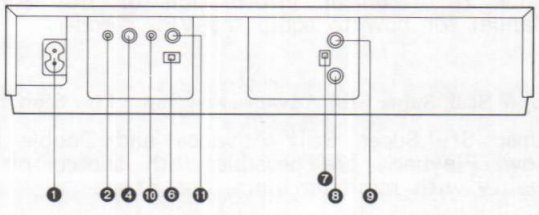

(NV-G21B)

1. **AC Mains Lead Socket**

   Connect the AC Mains Lead to the AC Mains Socket of VTR and outlet.

2. **Audio Input Socket**
3. **DBS Switch (NV-G21EG)**

   When this button is pressed to on,tuned signal(through tuner) is connected to output of Euro AV terminal,then VTR is ready to recieve the video signal from input of Euro AV terminal.

4. **Video Input Socket**

www.freeservicemanuals.info

5. **Euro AV Socket (NV-G21EG/EO/EV)**

6. **Colour Mode/Test Signal Switch**

When Colour Mode/Test signal switch is selected to "TEST" , two vertical lines (Test signal) are generated from RF out.
Tune the TV set to UHF approx.Channel 36 so that Test signal can be seen, when colour Mode/Test signal switch is selected to "AUTO" position, TV set is ready to receive the RF output signal from the VTR.
* If, during recording or playback, the colour is not satisfactory, it can be stabilized by setting colour Mode/Test signal switch to "COLOUR".

7. **RF Signal Level Switch**

Used to attenuate the reception of the VHF and/or UHF antenna signals.
If the reception is normal, set to "HIGH".
If the signal is strong, set to "LOW".

8. **RF Input Socket**

9. **RF Output Socket**

10. **Audio Output Socket (NV-G21B)**

11. **Video Output Socket (NV-G21B)**

INFRA-RED REMOTE CONTROLLER

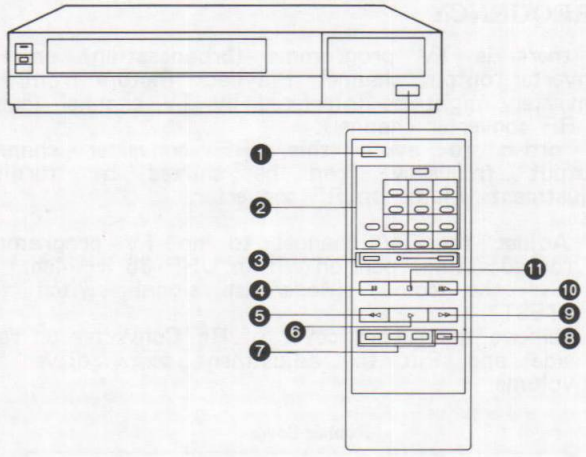

1. **VTR On/Off Switch**

For turning the VTR on and off.

2. **Timer Recording & Programme Position Selector Buttons**

3. **Record Buttons (●)**

To start recording, press the both buttons simultaneously.

4. **Pause/Still Button (■■)**

5. **Rewind ◀◀/Review [◀◀] Button**

When this button is kept pressed during playback, the VTR changes over to the Review playback mode.

6. **Play Button (▶)**

7. **Slow Button (▮▶)**

Press the Slow Button for slow-motion playback at 1/10 of normal speed. The slow playback speed can be varied between 1/30 and 1/5 of normal speed by using the "+" and "−" Buttons.

Note:

If the VTR is left in the slow playback mode for more than 10 minutes, the VTR will automatically switch over to the stop mode, to protect the tape and the video heads.
* Adjust the Slow Tracking Control if necessary.

8. **Double Speed Playback Button (X2)**

9. **Fast Forward ▶▶/Cue [▶▶] Button**

When this button is kept pressed during playback, the VTR changes over to the Cue playback mode.

10. **Still Advance Button (▮▮▶)**

11. **Stop Button (■)**

Note:

* The infra-red beam should be transmitted directly at the Infra-red Remote Control Receiver on the front of the VTR.
* Direct sunlight may interfere with the beam.
* The lightsensing angle of the Infra-red Remote Control Receiver window in the VTR is about 60 degrees.
* The unit should be used within a range of about 7 meters from the front of the VTR.

DIGITAL SCANNER

This Digital Scanner lets you programme timer recording by tracing the corresponding bar codes on the supplied Programming Sheet and then transferring the data to the VTR.

< HOW TO OPERATE THE DIGITAL SCANNER >

1. Set power ON/OFF switch to "ON".

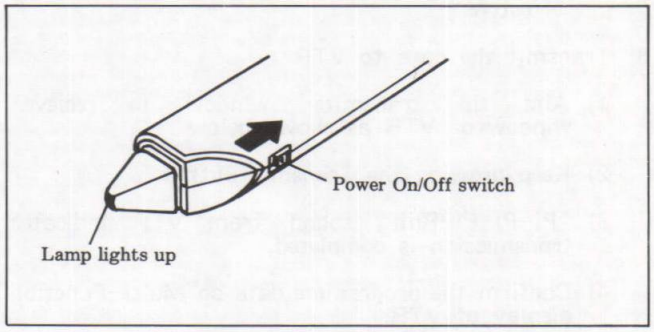

Note1:

If no operation is performed for more than 25 seconds, the Scanner will automatically switch over for power-saving and the lamp will go off.(In case that bar codes have already been read but not yet transmitted to VTR, the data will be cancelled)

2. Read the bar codes for the desired programme (channel, day, start time, and end time)

1) Place the Digital Scanner vertically on the start mark.

2) Trace the bar codes quickly in dirrection of arrow as shown below.
When Digital Scanner has read bar codes completely, it gives you "Pi" sound for confirmation.

www.freeservicemanuals.info

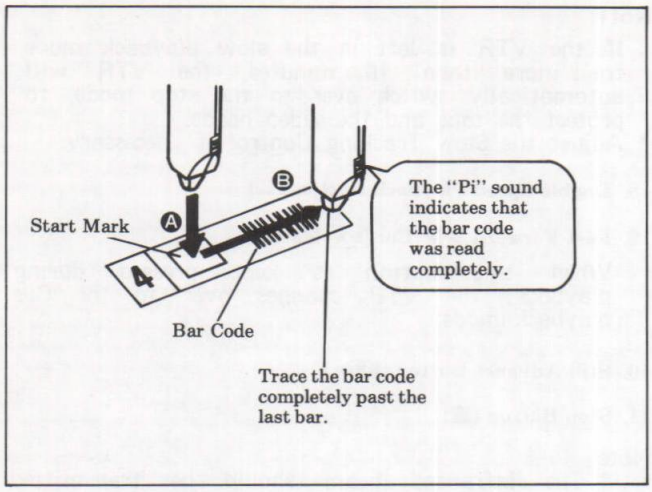

Note2:

(1) When there is no "Pi" sound, the reading of the bar codes is incomplete.
Trace the bar codes again.

(2) Since reading order is free, Digital Scanner can trace from any items (for example day first and end time next, start time and channel last or start time first and channel next, end time and day last) anyway, when 4 items (day, channel, start time and end time) have been read, it gives you "Pi–Pi–Pi–Pi–Piiii" sound that mean Scanner is now ready for data transmission.

(3) If the bar codes are traced slowly, it cannot read correctly.

(4) If more than one bar code is read in the same group, only last read will be effective.

3. Transmit the data to VTR

1) Aim the transmiter window to reciever window of VTR as shown below.

2) Keep pressing the Transmit Button.

3) "Pi–Pi–Pi–Piiii" sound from VTR indicates transmission is completed.

4) Confirm the programme data on Multi–Function display of VTR.

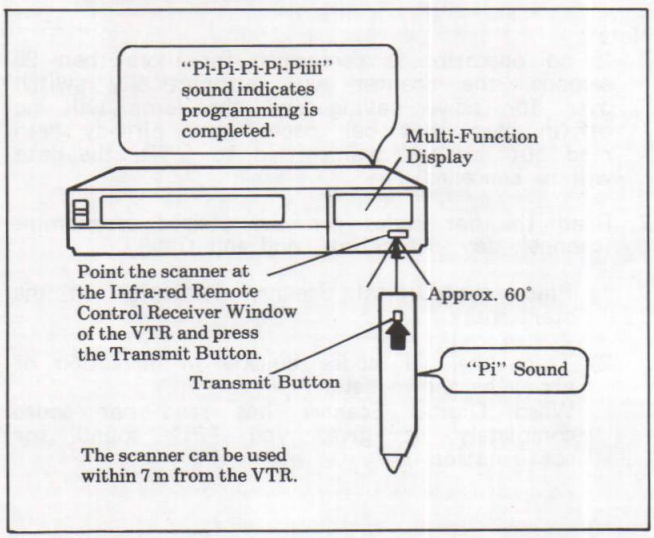

Note3:

(1) If the transmission was not received correctly, warning sound("Pi–Pi,Pi–Pi") will be heard you from VTR. In this case, try transmission again.

(2) The programming will be memorized on the next, lower unoccupied timer programme number area 8~1 in the timer IC.
If all programme numbers are occupied, the warning sound "Pi–Pi,Pi–Pi" from VTR will warn you the programming cannot be made. In other words, you can make 8 programmes.

(3) When the transmission is completed, the VTR will automatically be placed onto the timer recording standby condition and power will be turned off.

(4) The transmission is possible when the VTR is turned on but is not in any of the recording or playback operation modes.
It is also possible when the VTR is in the timer recording standby mode(indication is lit).

(5) When you want to check the programme which has memorized, trace the "CHECK" bar codes on programming sheet and transmit to VTR.
You will see programmed data on the Multi–Function display of VTR.

HOW TO ADJUST THE RF CONVERTER FREQUENCY

If there is TV programme (broadcasting) on RF converter output channel, Playback Picture from RF converter might be interfered by TV channel (same as RF converter channel).
In order to avoid this, RF converter channel (output frequency) can be shifted by turning adjustment volume on RF converter.

1. Adjust the TV channel to no TV programme (broadcasting) portion within UHF 36 +– 4ch.
2. Set the colour Mode/Test signal switch for "TEST".
3. Remove the rubber cover of RF Converter on rear side and Put the adjustment screw driver to volume.

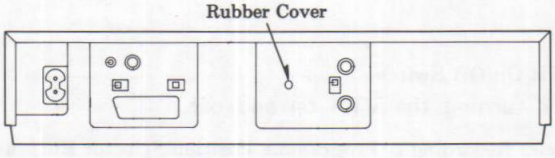

(Rear Side)

4. Turn the volume of RF converter so that Test signal (2 vertical lines) Can be seen on TV screen clearly as shown below.

www.freeservicemanuals.info

SECTION 2
ADJUSTMENT PROCEDURES

2-1. MECHANICAL ADJUSTMENT PROCEDURES

This Mechanical Chassis of this model NV-G21 is the same as the G Mechanical Chassis.
Therefore please refer to the Service Manual G Mechanical Chassis (Order No. VRD8701105).

2-2. DISASSEMBLY METHOD

2-2-1. DISASSEMBLY FLOWCHART

This flowchart indicates disassembly steps of the cabinet parts and the Circuit Boards in order to find the necessary items for servicing.
When reassembling, perform the steps in the reverse order.

Note:
When removing the Front Panel, be careful to avoid any damages for the locking portions of the panel.

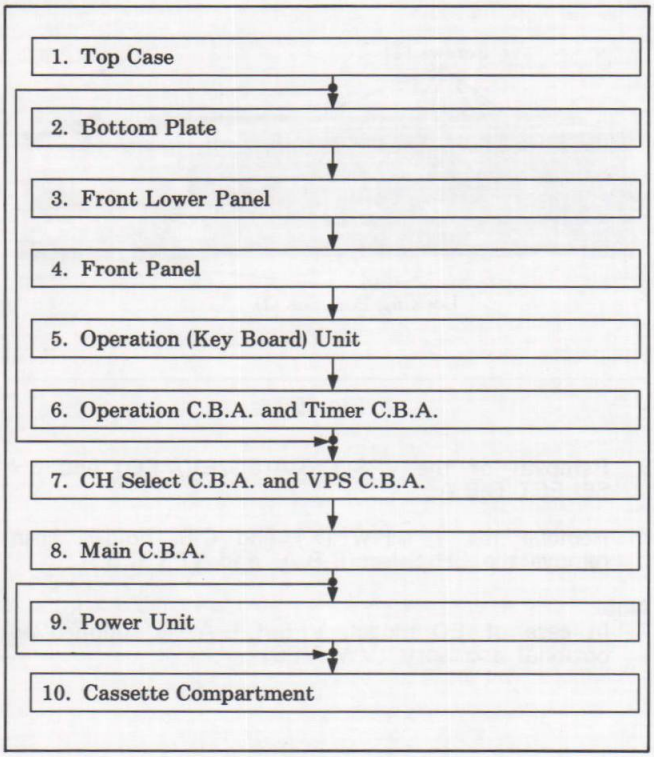

Fig. D1

2-2-2. DETAIL OF DISASSEMBLY METHOD

1. Removal of the Top Case

Remove the screws (A) (EG: 4 screws, EO/EV/B: 2 screws), then carefully lift the rear of the Top Case to remove.

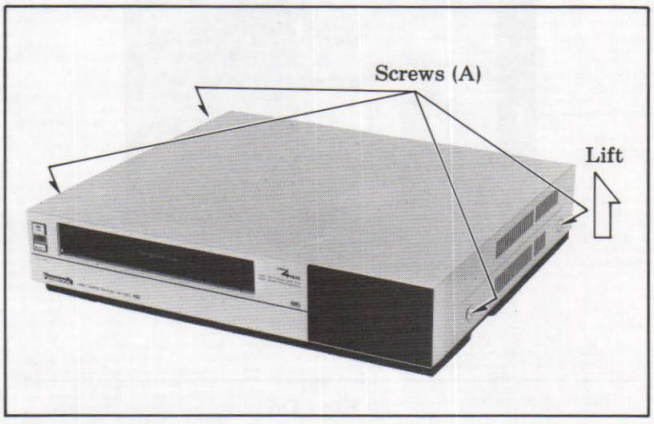

Fig. D2

2. Removal of the Bottom Plate

Place the deck upside down so that the bottom side faces upward.
Then remove the screws (B) (EG: 6 screws, EO/EV/B: 4 screws).

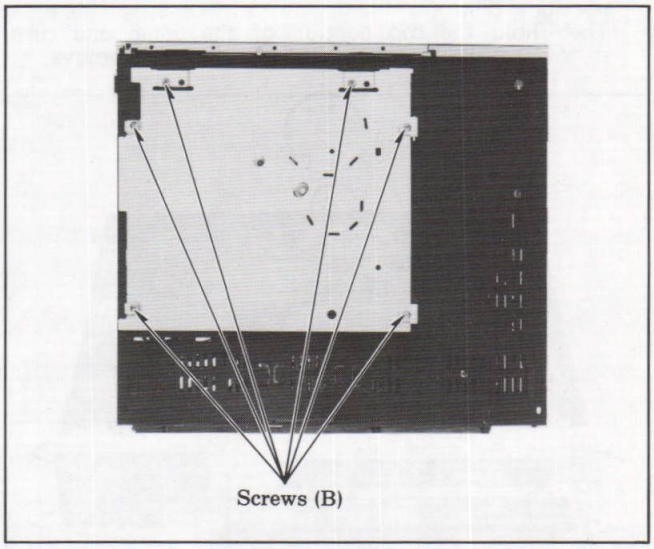

Fig. D3

Note:
Place the cushion under the deck to avoid any damages.

www.freeservicemanuals.info

3. Removal of the Front Lower Panel.

Place the deck up side down so that the bottom side faces upward.
Then remove the 1 screw (C) and unlock the 3 locking portions (D).

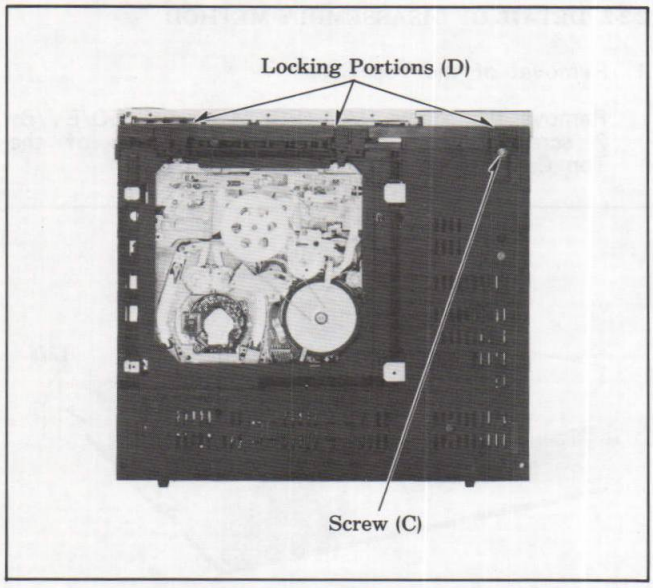

Fig. D4

Note:
Place the cushion under the deck to avoid any damages.

4. Removal of the Front Panel

Open the Operation (key Board) Unit and remove the 1 screw (E) and unlock the 5 locking portions (F).
Then hold the top portion of the panel and turn it toward the front side of the deck to remove.

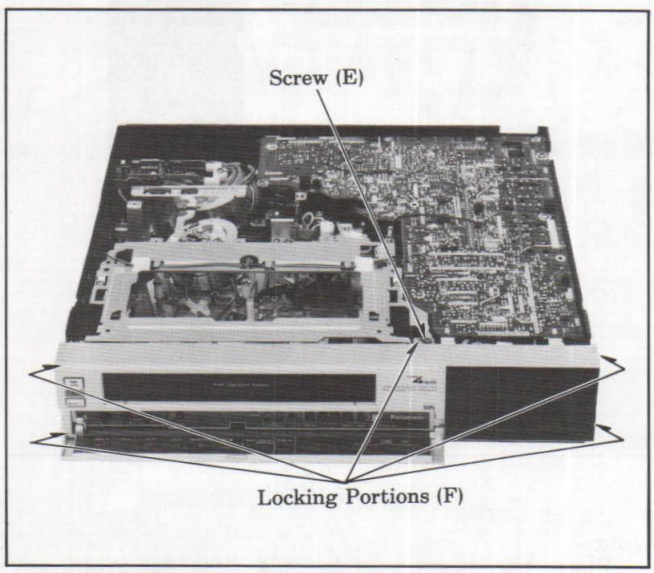

Fig. D5

5. Removal of the Operation (key Board) Unit

Remove the 2 screws (G) and unlock the 2 locking portions (H).
Unlock the connector P7502 and remove the flexible wire.
Then carefully remove the Operation (key Board) Unit.

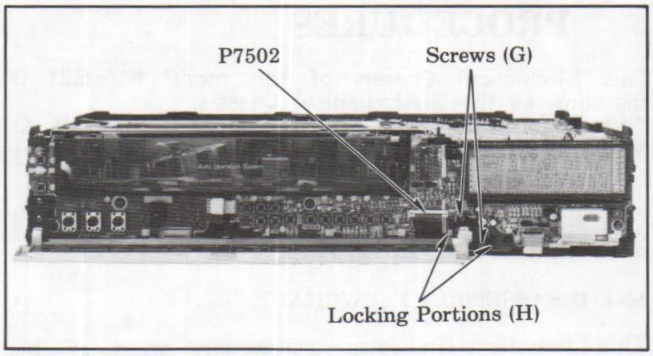

Fig. D6

6. Removal of the Operation C.B.A. and Timer C.B.A.

Remove the 7 screws (I) and unlock the 3 locking portions (J).

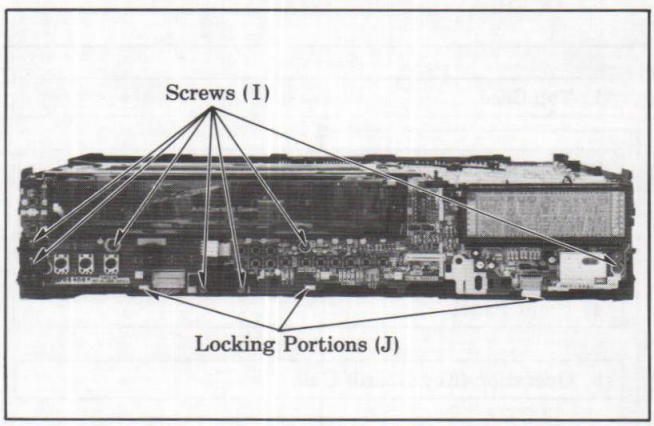

Fig. D7

7. Removal of the VPS C.B.A(EG/EV/*EO) and CH SELECT C.B.A.

Remove the 1 screw (K) and C.B. holder, then remove the CH Select C.B.A. and VPS C.B.A..

Note:
In case of EO model, VPS C.B.A. is supplied as optional accessory (VW-VPS1).

www.freeservicemanuals.info

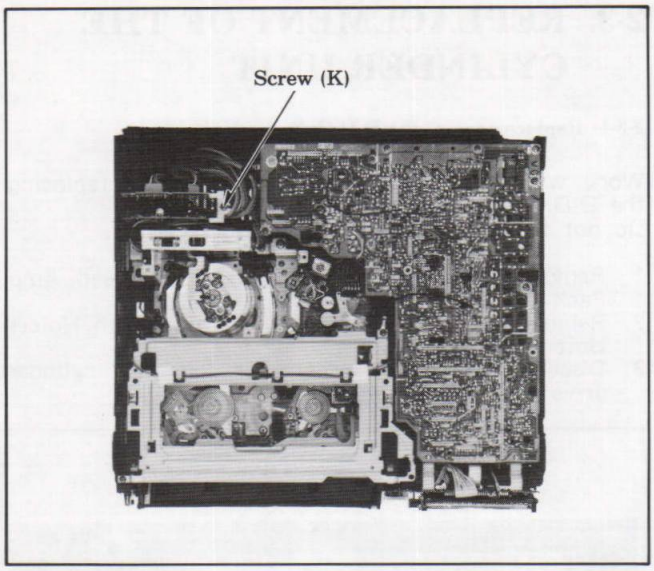

Fig. D8

8. Removal of the Main C.B.A.

Remove the 8 screws (L) and take out the Main C.B.A. Putting it up right position on the flame can be available as shown in Fig.D10.

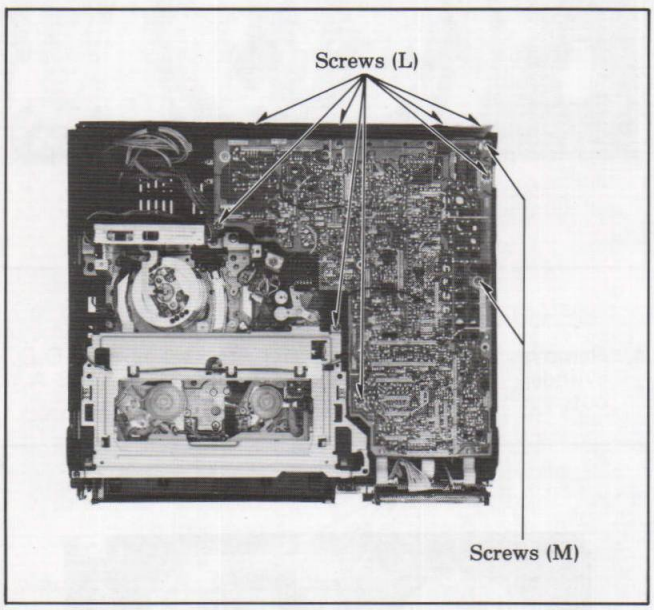

Fig. D9

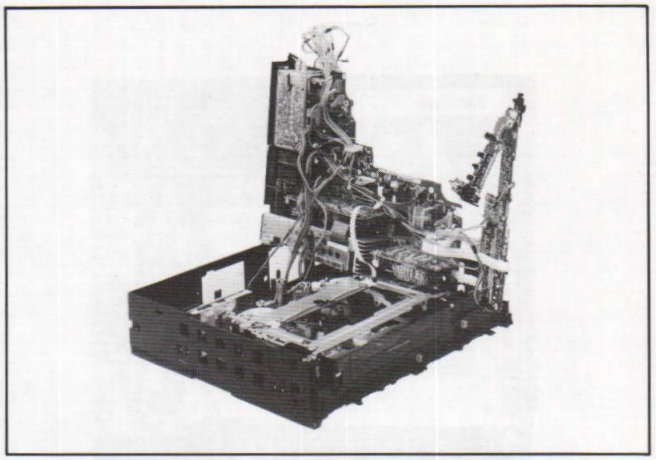

Fig. D10

9. Removal of Power Unit

Remove the 2 screws (M) and take it out from the Main C.B.A.as shown in Fig.D9 and D11. Remove the shield case then checking can be performed.

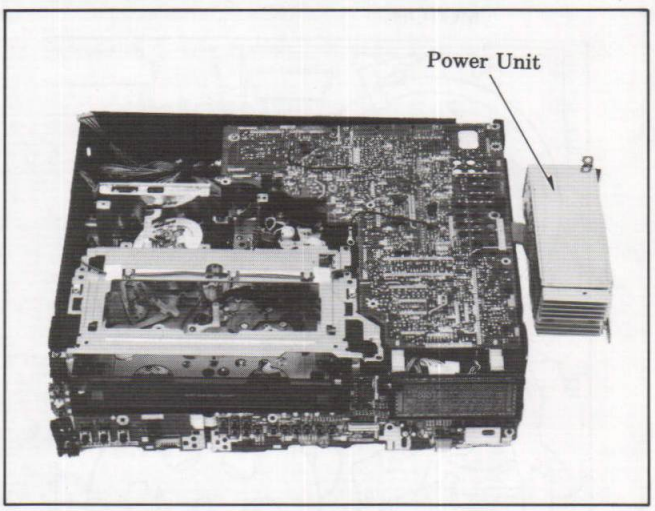

Fig. D11

10. Removal of Cassette Compartment

Remove the 3 screws (N).
Slide the cassette holder until appearing 2 screws (O) by turning (clockwise) the Capstan Rotor Unit (located in the bottom side as shown in Fig.D13) and remove the 2 screws (O).
Remove the flexible cable from connector P1503 mounted on Take-up Photo Tr C.B.A. ,then carefully pull out the Cassette Compartment.

www.freeservicemanuals.info

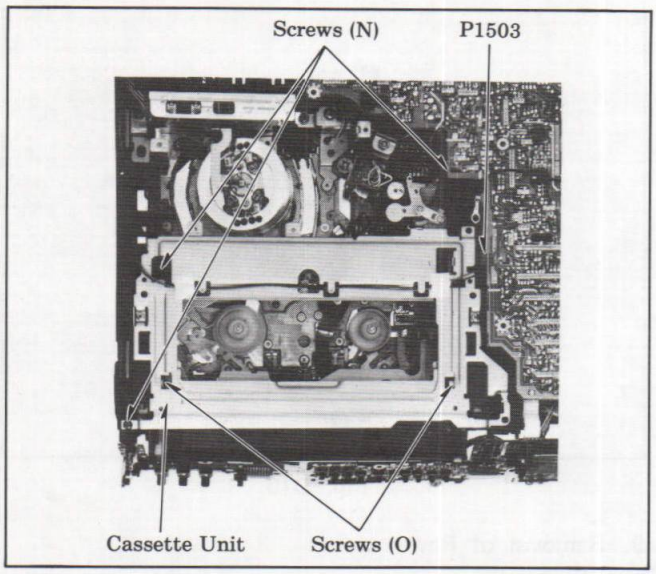

Fig. D12

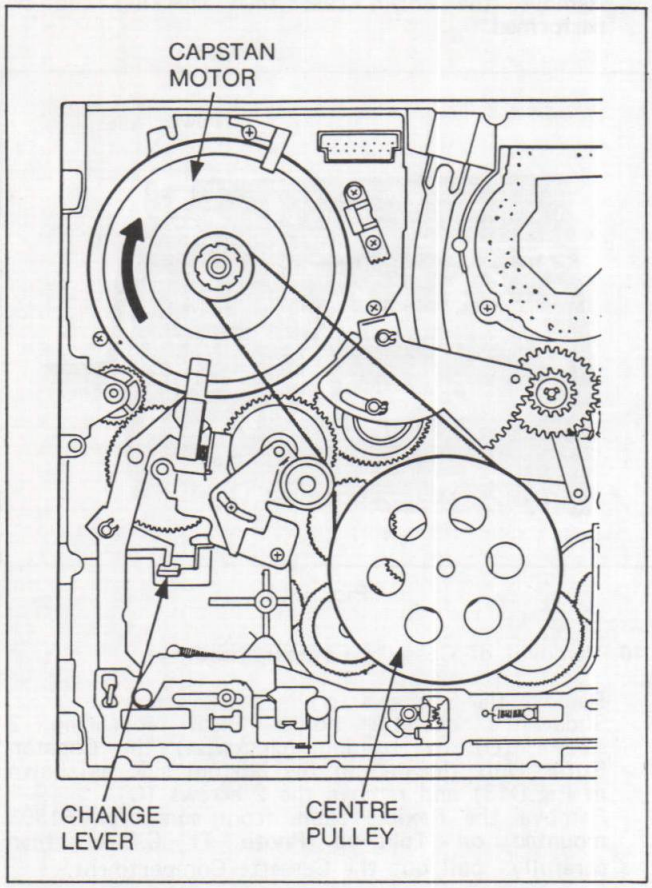

Fig. D13

Note1:
When reinstalling the Cassette Compartment, mechanical adjustment (alignment) must be performed for correct working , refer to Service Manual (G Mechanical chassis) (order No. VRD8701105, item 3–10 Reinstallation of Cassette Compartment for mechanical adjustment (alignment).

2-3. REPLACEMENT OF THE CYLINDER UNIT

2-3-1. Replacement of the D.D Cylinder Unit

Work with extreme care when removing or replacing the D.D. cylinder unit.
Do not touch the video head during servicing.

1. Remove the 2 screws (P) to take the Head Amp Pack Out.
2. Remove the 1 screw (Q) to take the Earth Holder Unit Out.
3. Disconnect the 5P connector on the cylinder drive C.B.A.

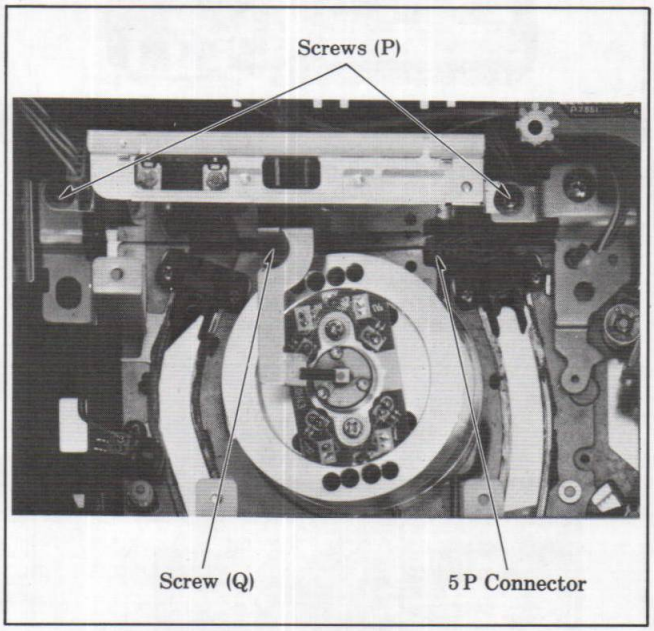

Fig. D14

4. Remove the 3 screws (R) to take the D.D. cylinder unit (with the cylinder drive C.B.A.) out.

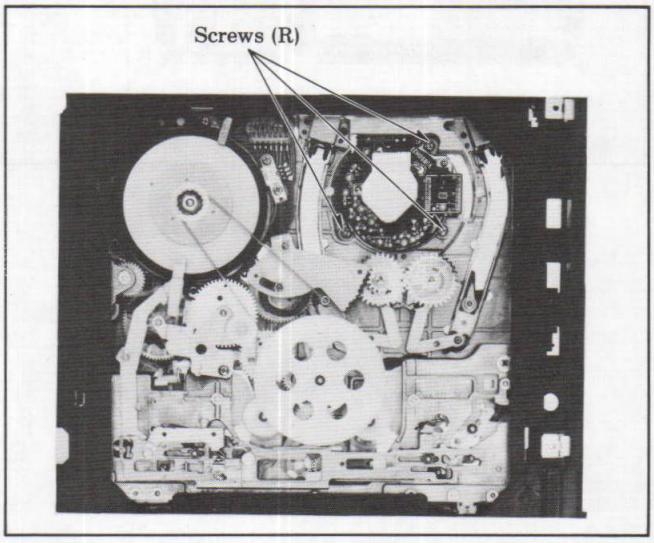

Fig. D15

www.freeservicemanuals.info

Note:
Since there is very little clearance between the D.D. cylinder unit and the chassis, remove the D.D. cylinder unit gently and carefully.

5. Reinstall the new D.D.Cylinder Unit, tighten the 3 screws (R) and reinstall the Earth Holder Unit, tighten the 1 screw (Q).
Then re–connect the Head Amp pack and 5P connector and tighten 2 screws (P).

Note:
(1) Gently rub the video head in direction of tape travel with Head cleaning stick.
(2) After replacement, confirm the performance. If any further maintenance is required, perform "TAPE INTER–CHANGE ABILITY ADJUSTMENT".

2-3-2. Replacement of the Cylinder Drive C.B.A.

1. Remove the D.D. cylinder unit referring the Item 2–3–1.
2. Place the D.D. cylinder unit upside down.
3. Unsolder the soldered portion (S) for shield case to take it out.
4. Unsolder the 14 soldered portions (T) indicated by an arrow mark (including 6 soldered portions inside of shield case).
5. Remove the 2 screws (U) to remove the cylinder drive C.B.A. unit.

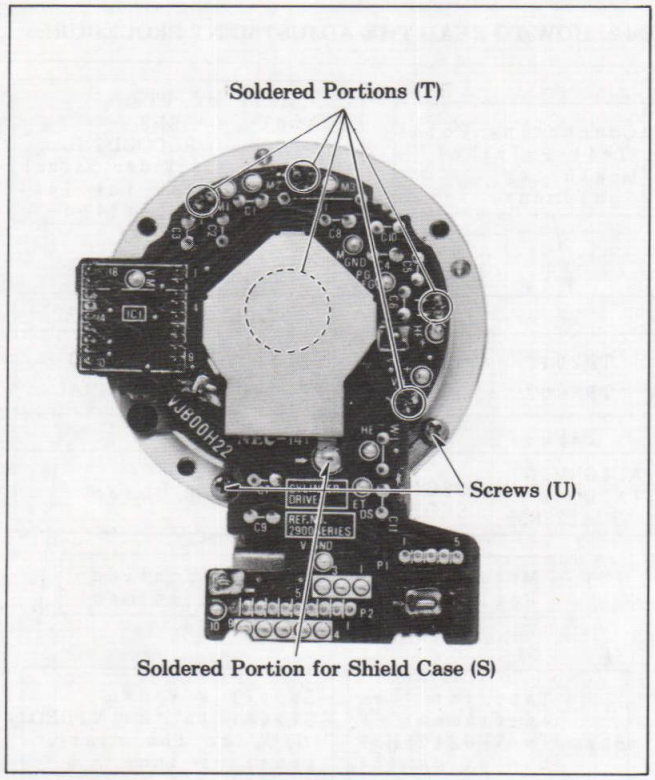

Fig. D16

6. Reinstalling is just reverse way of above procedures.

2-3-3. Replacement of the Cylinder Drive IC

1. Remove the Cylinder Drive C.B.A. as item 2–3–2.
2. Remove the screw (T) to take the heat sink plate out.
3. Unsolder the 18 soldered portions of the Cylinder Drive IC to take it out.
4. Reinstall the New IC with the care of Pins location.
5. Re–solder the 18 pins of the Cylinder Drive IC.
6. Reinstall the Cylinder Drive C.B.A. to the D.D. Cylinder Unit.

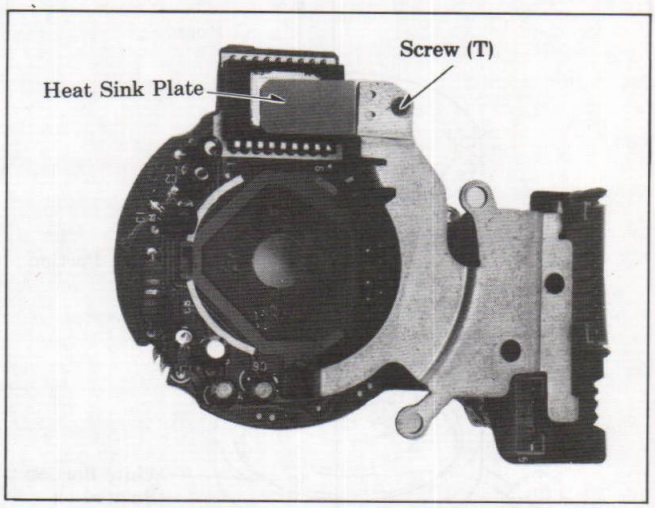

Fig. D17

2-3-4. Replacement of the Upper Cylinder Unit

1. Remove two screws as shown below.
2. Unsolder 8 soldered portions indicated by arrows on the C. Board.
3. Remove the Upper Cylinder Unit by lifting it upward.

Note:
Soldered portion can be easily removed by using solder sucking wire, etc.

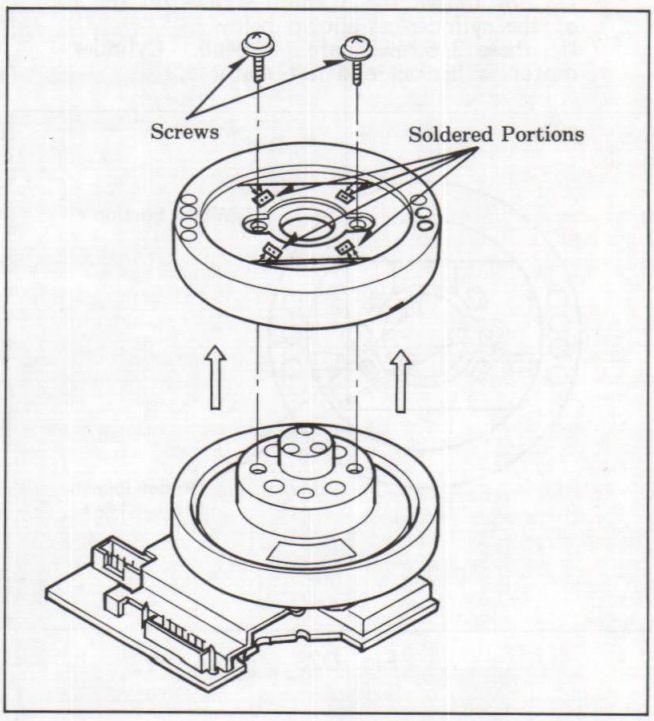

Fig. D18

www.freeservicemanuals.info

4. The upper cylinder unit can be reinstalled by reversing the removal procedure, however, when the upper cylinder is reinstalling, be extremely carefull so that white portion of C. Board of the upper cylinder correctly matches the white portion of the bottom cylinder as shown below.

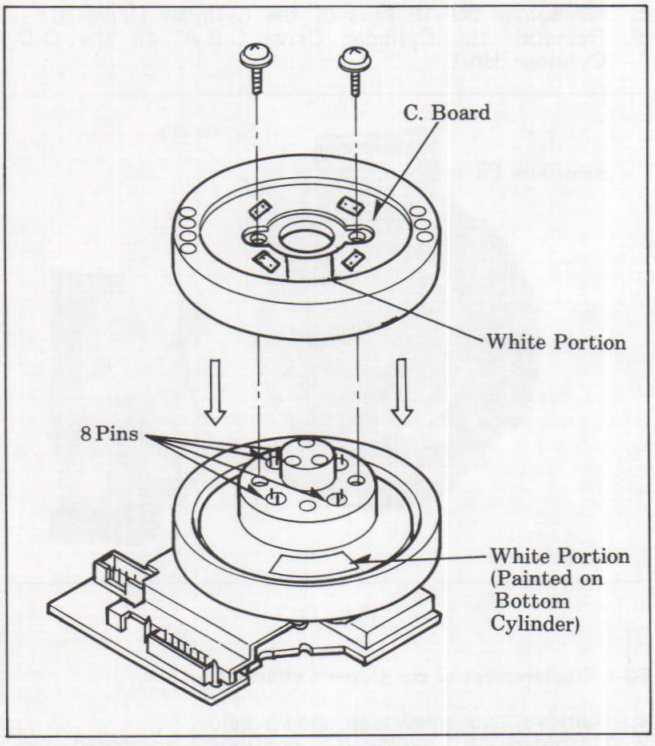

Fig. D19

Note:
1). If the Upper Cylinder Unit is reversely installed, no colour would appear when playing back a pre-recorded tape.
2). Do not loosen the 3 small screws on the top of the cylinder as shown below .
If these 3 screws are loosend, Cylinder motor is broken and not restored.

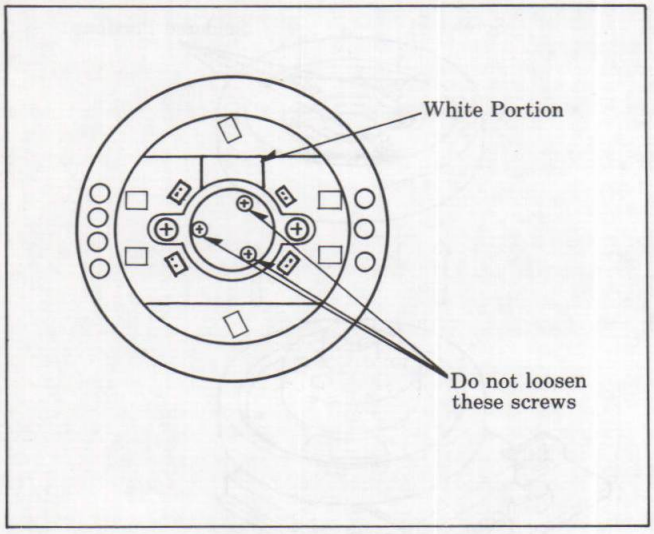

Fig. D20

2-4. ELECTRICAL ADJUSTMENT PROCEDURES

This section provides complete electrical adjustment procedures which may be required for electronic circuits of VHS video Cassette Recorders NV-G21.

2-4-1. TEST EQUIPMENTS

To perform the electrical adjustments completely, following equipments are required.

1. VTVM (Vacuum Tube Volt Meter) or DVM (Digital Volt Meter)
   Voltage Range: 0.001~50V
2. Dual-Trace Oscilloscope
   Voltage range: 0.005~50V/div.
   Frequency Range: DC~30MHz
   Probes: 10:1
3. Frequency counter
   Frequency Range: 0~10MHz
4. Signal Generator (Sinewave)
   Frequency Range: 0~500KHz
5. Video Sweep Generator
   Frequency Range: 0~10MHz
6. Colour Monitor TV
7. Plaastic Tip Driver
8. VHS Alignment Tape (VFJ8125H3F)
9. Pattern Generator

2-4-2. HOW TO READ THE ADJUSTMENT PROCEDURES

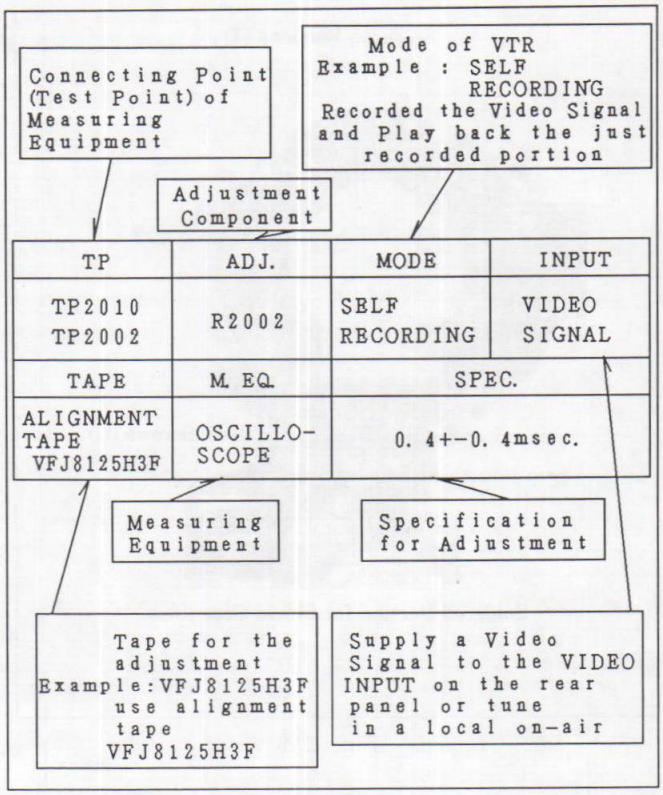

Fig. E1

www.freeservicemanuals.info

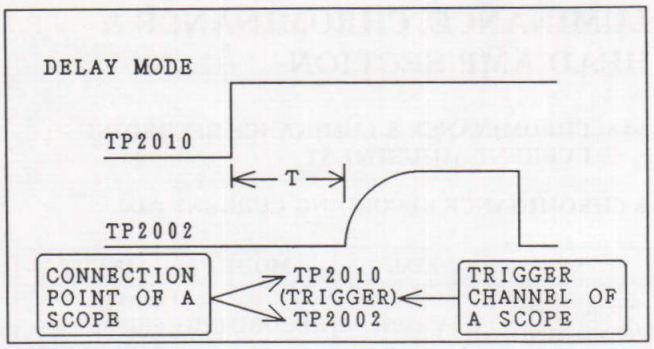

Fig. E2

Note:
Before the electrical adjustment, set the VHS VTR as following conditions except for especial instructions in each adjustment item.

1) Tracking Control VR --- Centre FIX Position
2) Picture Sharpness VR --- Centre FIX Position
3) RF Signal Level SW --- HIGH
4) Colour Mode/Test Signal SW --- AUTO
5) Timer Record Button --- OFF
6) EDIT SW --- OFF
7) DBS SW --- OFF (NV-G21EG)
8) Oscilloscope-Probe --- 10:1 Probe

SERVO SECTION

2-4-3. PG SHIFTER ADJUSTMENT

TP	ADJ.	MODE	INPUT
TP2001 TP3002	VR2001	PLAY	
TAPE	M. EQ.	SPEC.	
ALIGNMENT TAPE VFJ8125H3F	OSCILLO-SCOPE	6.5±0.5H	

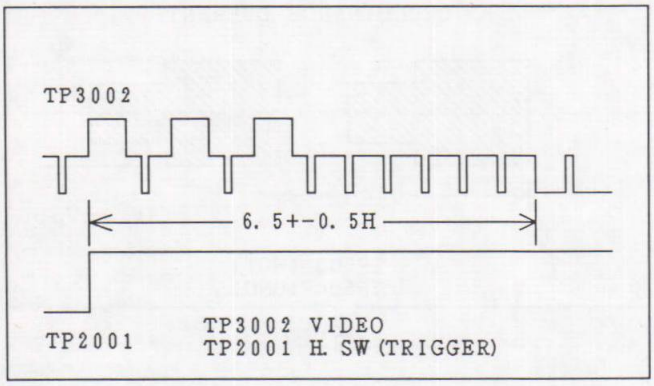

Fig. E3

2-4-4. TRACKING FIX ADJUSTMENT

TP	ADJ.	MODE	INPUT
TP2001 TP2002	VR2002	SELF RECORDING	VIDEO SIGNAL
TAPE	M. EQ.	SPEC.	
BLANK TAPE	OSCILLO-SCOPE	T=1.6±0.4msec.	

1. Set the TRACKING VR to the centre fix position.
2. Record video signal, then play back the just recorded portion.
3. Adjust VR2002 so that the period of "T" becomes 1.6 +- 0.4msec as shown in Fig.E4.

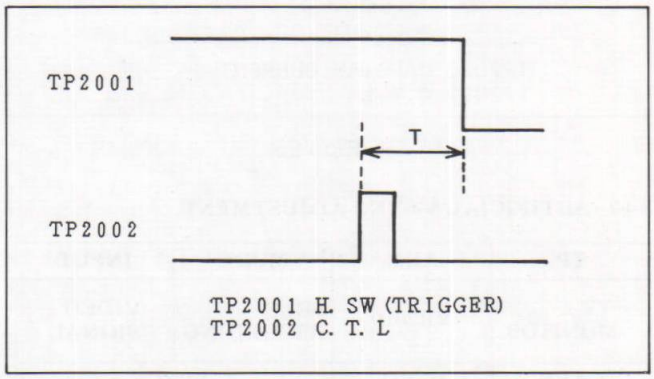

Fig. E4

2-4-5. SLOW FREERUN ADJUSTMENT

TP	ADJ.	MODE	INPUT
TP2015	VR2013	STILL	VIDEO SIGNAL
TAPE	M. EQ.	SPEC.	
BLANK TAPE	FREQUENCY COUNTER	453±15Hz	

1. Record video signal and play back the tape just recorded.
   Then place the unit in STILL mode.
2. Connect the jumper wire between TP2025 and GND.
3. Connect the jumper wire between TP2026 and GND.
4. Connect the frequency counter to TP2015.
5. Adjust the VR2013 so that the frequency is 453 +- 15Hz.

2-4-6. SLOW TRACKING ADJUSTMENT

TP	ADJ.	MODE	INPUT
TP2020 TP2002	VR2011	SLOW	VIDEO SIGNAL
TAPE	M. EQ.	SPEC.	
BLANK TAPE	OSCILLO-SCOPE	T=21.5±2.0msec.	

www.freeservicemanuals.info

1. Set the SLOW TRACKING VR to centre fix position.
2. Record video signal and play back the just recorded portion. Then place the unit in SLOW mode.
3. Adjust VR2011 so that the period of "T" is 21.5 +– 2.0msec as shown in Fig. E5.

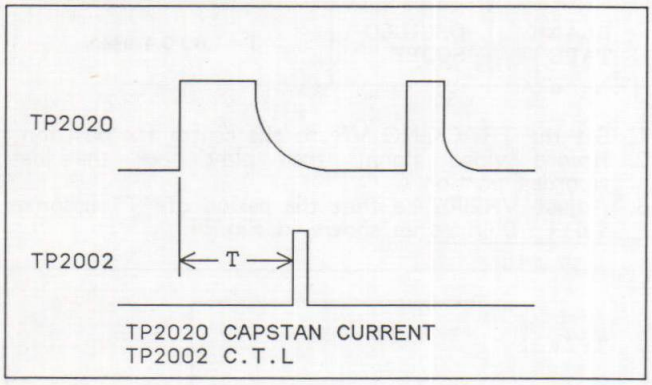

Fig. E5

2-4-7. ARTIFICIAL V-SYNC ADJUSTMENT

TP	ADJ.	MODE	INPUT
TV MONITOR	VR2010	SELF RECORDING	VIDEO SIGNAL
TAPE	**M. EQ.**	**SPEC.**	
BLANK TAPE	TV MONITOR		

1. Record video signal and play back the just recorded portion. Then place the unit in STILL mode.
2. Adjust VR2010 on the Servo pack (VEP02266A) so that the V–dancing does not appear on the TV monitor as shown in Fig. E6.
3. Confirm that the V–dancing does not appear in CUE and REVIEW modes. If the V–dancing is appeared on the TV monitor, this adjustment should be repeated again.

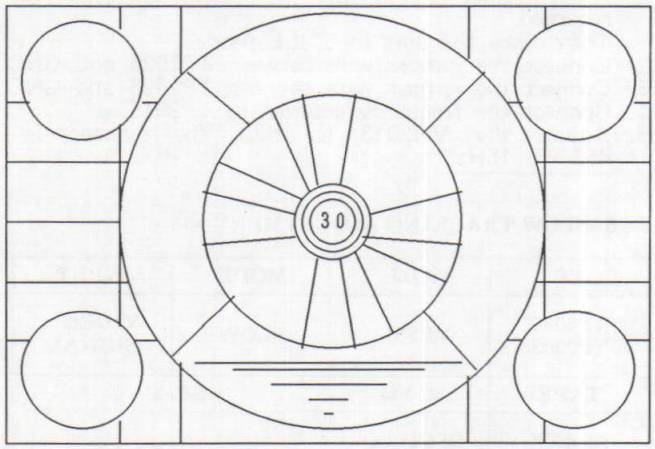

Fig. E6

LUMINANCE, CHROMINANCE & HEAD AMP SECTION

2-4-8. CHROMINANCE & LUMINANCE RECORDING CURRENT ADJUSTMENT

∗ CHROMINANCE RECORDING CURRENT ADJ.

TP	ADJ.	MODE	INPUT
TP503 (HOT) TP504 (GND)	VR502	RECORDING	VIDEO SIGNAL (COLOUR BAR)
TAPE	**M. EQ.**	**SPEC.**	
BLANK TAPE	OSCILLO-SCOPE	34±3mVp-p	

∗ LUMINANCE RECORDING CURRENT ADJ.

TP	ADJ.	MODE	INPUT
TP503 (HOT) TP504 (GND)	VR501	RECORDING	VIDEO SIGNAL (COLOUR BAR)
TAPE	**M. EQ.**	**SPEC.**	
BLANK TAPE	OSCILLO-SCOPE	170±5mVp-p	

1. Connect the oscilloscope to TP503 (HOT) and TP504 (GND). Then place the unit in RECORDING mode.
2. Set the VR501 to minimum position, so that luminance recording current signal must be closed to observe the chrominance recording current signal.
3. Adjust VR502 so that the chrominance recording current level is 34 +– 3mVp–p as shown in Fig. E7.

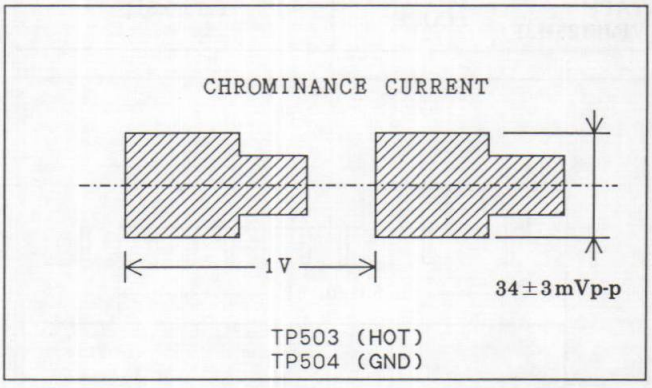

Fig. E7

www.freeservicemanuals.info

4. Adjust VR501 so that the luminance recording current level 170 +− 5mVp−p.

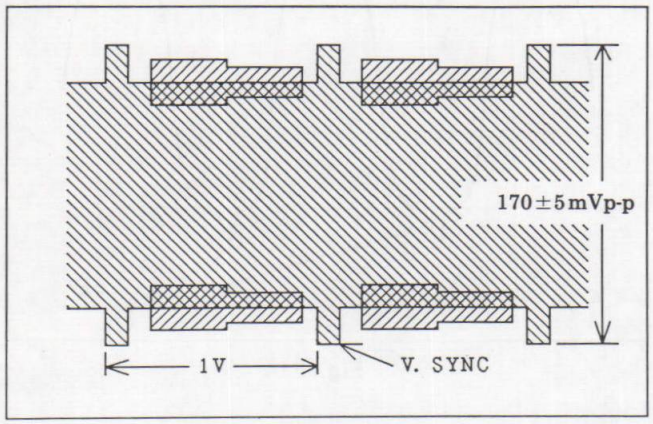

Fig. E8

2-4-9. HEAD AMP FREQUENCY RESPONCE ADJUSTMENT

TP	ADJ.	MODE	INPUT
TP3002	VR3012	SELF RECORDING	VIDEO SWEEP
TAPE	**M. EQ.**	**SPEC.**	
BLANK TAPE	VIDEO SWEEP/ OSCILLO-SCOPE	A=0±1dB	

1. Set the sweep generator output as shown in Fig. E9.

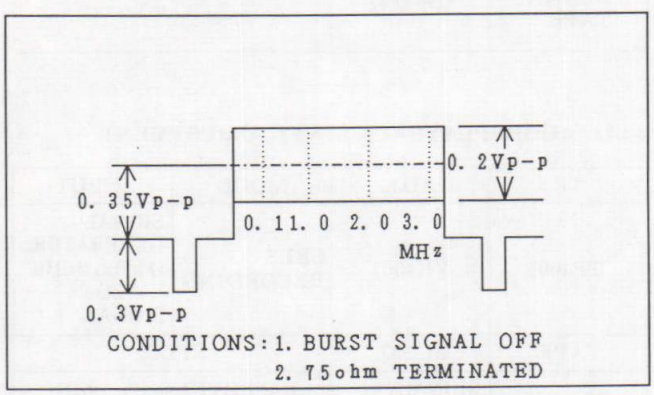

Fig. E9

2. Set the PICTURE VR to centre fix position and EDIT SW (on the front panel) to "OFF" position.
3. Record sweep signal, then play back the just recorded portion.
4. Adjust VR3012 so that the waveform (A) becomes 0 +− 1dB (90∼110%) comparing with 0.1MHz portion as shown in Fig. E10.

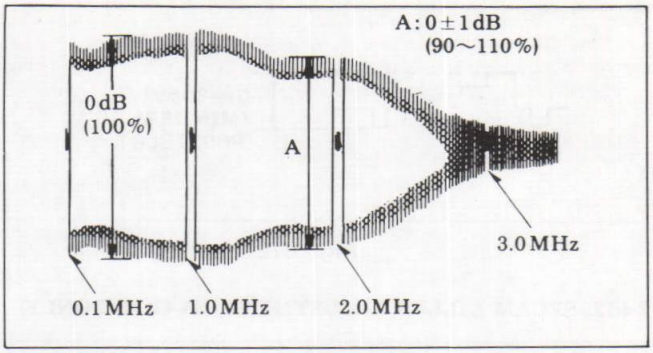

Fig. E10

2-4-10. PLAYBACK CHROMA CYAN LEVEL ADJUSTMENT

TP	ADJ.	MODE	INPUT
TP3002	VR801	SELF RECORDING	VIDEO SIGNAL (COLOUR BAR)
TAPE	**M. EQ.**	**SPEC.**	
BLANK TAPE	OSCILLO-SCOPE	0.55±0.1 Vp-p	

1. Record colour bar signal then play back the just recorded portion.
2. Adjust VR801 for 0.55 +−0.1 Vp−p as shown in Fig. E11.

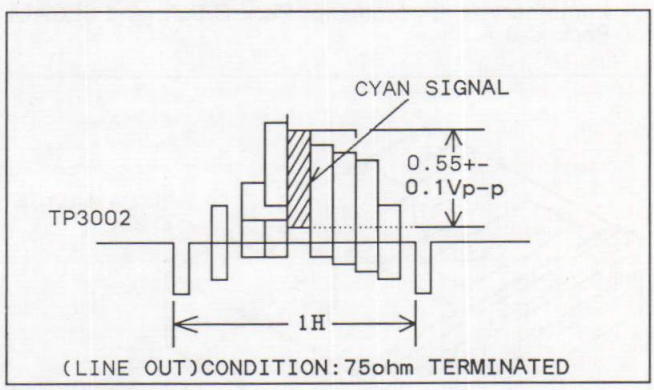

Fig. E11

2-4-11. HQ AMP GAIN ADJUSTMENT

TP	ADJ.	MODE	INPUT
Q301-(B) (CH-1) Q304-(E) (CH-2)	VR301	STOP	VIDEO SIGNAL (COLOUR BAR)
TAPE	**M. EQ.**	**SPEC.**	
	OSCILLO-SCOPE	0±30mVp-p	

1. Set the "EDIT SW" (on the front pannel) for "OFF" posisiton.
2. Connect the oscilloscope to Q301−Base (CH1) and Q304−Emitter (CH2).
3. Set the oscilloscope to "ADD" mode and set the Porality switch of CH2 side to "INV" (Invert) mode.
4. Adjust the VR301 so that operational amplitude becomes 0 +− 30mV (minimum as possible) as shown in Fig. E12.

www.freeservicemanuals.info

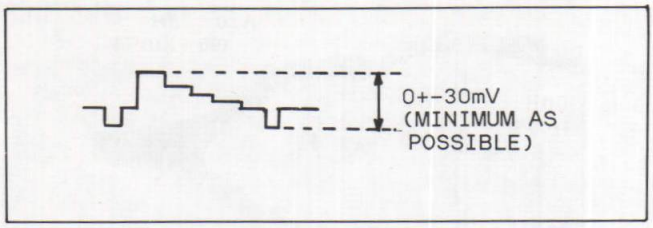

Fig. E12

2-4-12. SECAM KILLER ADJUSTMENT (NV-G21EG ONLY)

TP	ADJ.	MODE	INPUT
IC851-11	T851	SELF RECORDING	VIDEO SIGNAL (SECAM COLOUR BAR)
TAPE	**M. EQ.**	**SPEC.**	
BLANK TAPE	OSCILLO-SCOPE		

1. First, remove the Luminance & Chrominance Pack C.B.A. from the Main C.B.A., then, remove the SECAM Pack C.B.A. from the Luminance & Chrominance Pack C.B.A..
   Next, reinstall the Luminance & Chrominance Pack C.B.A. to Main C.B.A. on foil side and reinstall the SECAM Pack C.B.A. to Luminance & Chrominance Pack C.B.A. on foil side.
   Finally solder the soldering portions of the Luminance & Chrominance Pack C.B.A. and SECAM Pack C.B.A..

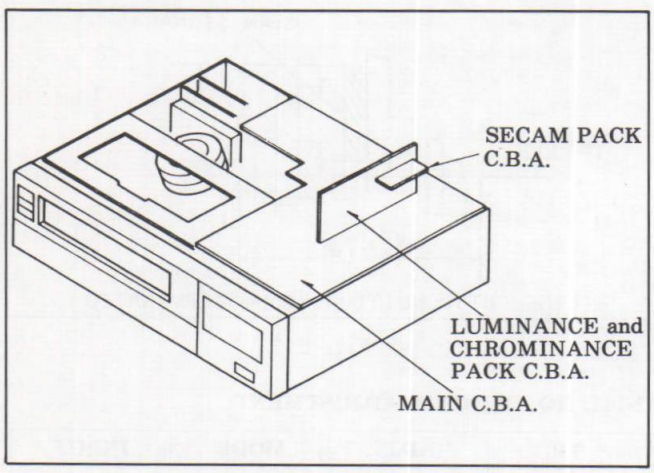

Fig. E13

2. Connect the oscilloscope to pin 11 of IC851 and place the unit in RECORDING mode.
3. Adjust the T851 so that the points "A" becomes maximum as shown in Fig. E14.

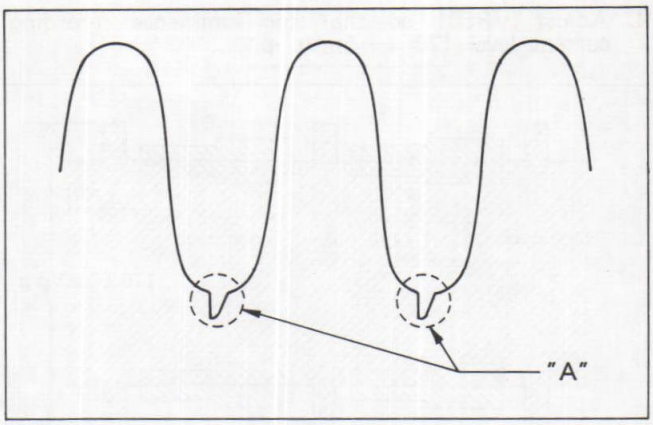

Fig. E14

AUDIO SECTION

Note:
Before the electrical adjustment in this section ,make the short circuit between Audio Input Jack and GND except for especial instructions in each adjustment item.

2-4-13. AUDIO BIAS CURRENT ADJUSTMENT

TP	ADJ.	MODE	INPUT
TP4002 (+) TP4003 (−)	VR4002	RECORDING	
TAPE	**M. EQ.**	**SPEC.**	
BLANK TAPE	V.T.V.M	3.2±0.1 mVrms	

2-4-14. AUDIO PLAYBACK LEVEL ADJUSTMENT

TP	ADJ.	MODE	INPUT
TP4001	VR4001	SELF RECORDING	SIGNAL GENERATOR (1 kHz, 0 dB)/ VIDEO SIGNAL
TAPE	**M. EQ.**	**SPEC.**	
BLANK TAPE	SIGNAL GENERATOR/ V.T.V.M	E-E LEVEL = −7±2 dB PLAYBACK LEVEL = E-E LEVEL ±0.5 dB	

Note:
Before this adjustment,"Tape Interchangeability Adjustment" must be completed.

1. Connect the V.T.V.M to TP4001 and Confirm that the E−E level is −7 +− 2dB.
2. Record the video and audio signals and play back the just recorded portion.
3. Adjust the VR4001 so that playback level becomes E−E level +− 0.5dB.

www.freeservicemanuals.info

TIMER SECTION

2-4-15. AN ELECTRICITY FAILURE DETECTION ADJUSTMENT

TP	ADJ.	MODE	INPUT
IC7551-12	VR7502		
TAPE	**M. EQ.**	**SPEC.**	
	OSCILLO-SCOPE/ 2 DC POWER SUPPLIES		

Note:
1) Do not connect the AC power plug.
2) Make a short circuit at C7518 to discharge. (refer to the Technical Information)

1. Set the voltage of the DC power supply (A) for 4.6 +– 0.05V and supply it to IC7551–8 (+) and GND (–).
2. Set the voltage of the DC power supply (B) for 45 +– 1V and supply it to JA–8 (D7555–anode side).
3. Turn the VR7502 until the voltage at pin12 of IC7551 is High Level.
4. Turn the VR7502 slowly until the voltage at TP7508 is Low Level (0V).
5. Change the voltage of the DC power supply (A) from 4.6 +– 0.05V to 4.8 +– 0.05V.
6. Confirm the voltage at pin12 of IC7551 is High Level.

2-4-16. TIMER CLOCK ADJUSTMENT

TP	ADJ.	MODE	INPUT
IC7501-37	C7502		
TAPE	**M. EQ.**	**SPEC.**	
	FREQUENCY COUNTER	3906.25 ± 0.008 μs	

Note:
1) Do not connect the AC power plug.
2) Make a short circuit at C7518 to discharge. (refer to the Technical Information)

1. Set the voltage of the DC power supply for 5.8V +– 0.1V and supply it to P7501–6 (+) and GND (–).
2. Connect a jumper wire between P7501–7 and GND.
3. Connect the frequency counter to IC7501–37.
4. Adjust C7502 for 3906.25us +– 0.008us.

LOCATION OF TEST POINTS & CONTROLS —1—

MAIN C.B.A.

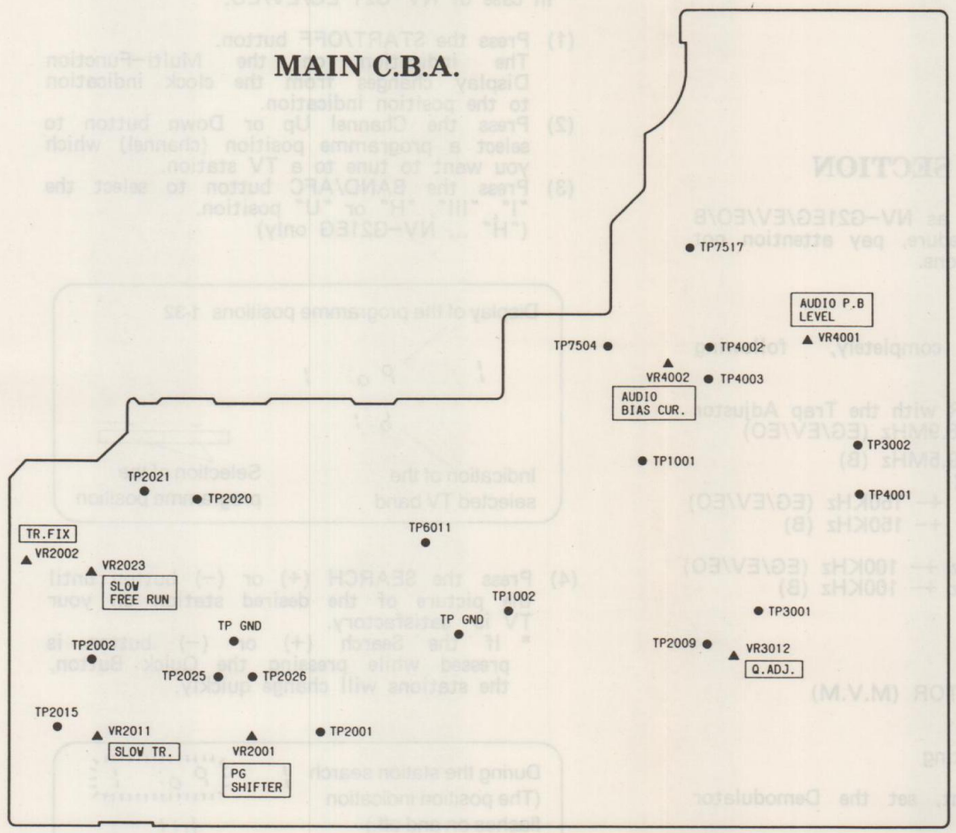

LUMINANCE & CHROMINANCE PACK C.B.A.

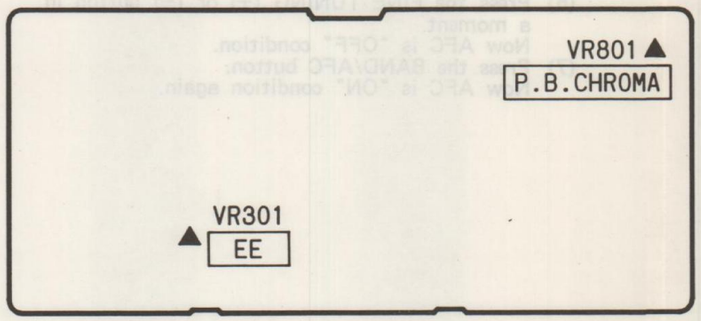

SERVO PACK C.B.A.

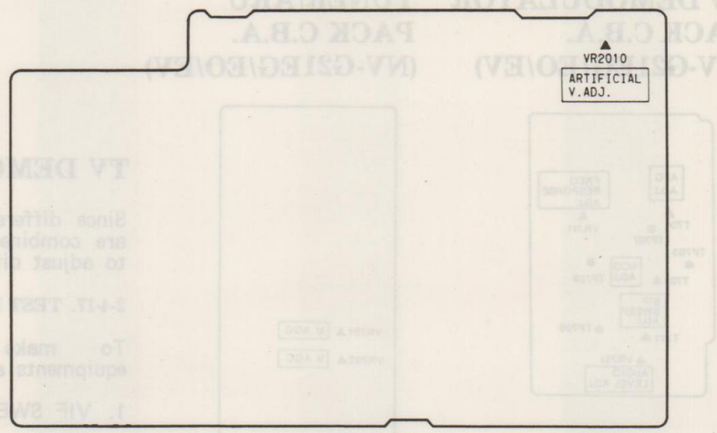

CH SELECT C.B.A.

TIMER C.B.A.

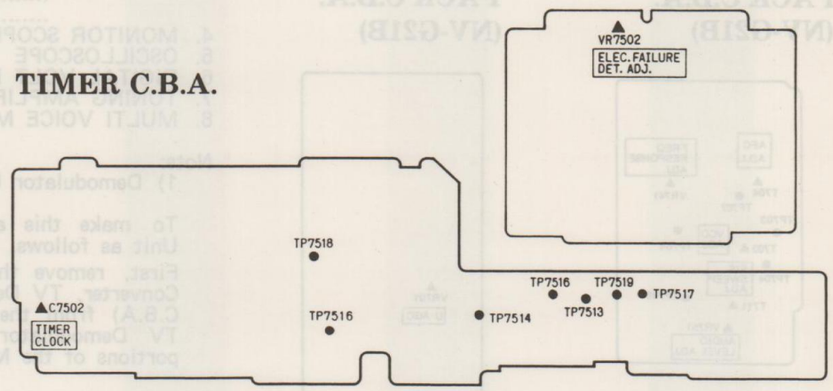

HEAD AMP PACK C.B.A.

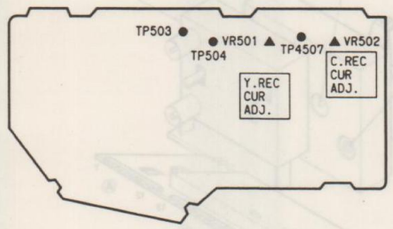

INPUT SELECT PACK C.B.A.

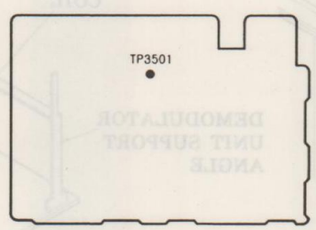

OPERATION C.B.A.

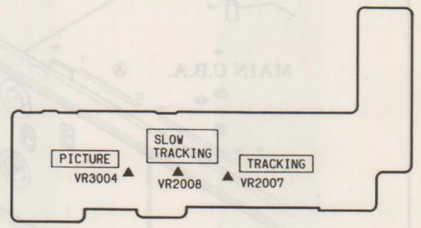

www.freeservicemanuals.info

LOCATION OF TEST POINTS & CONTROLS —2—

TV DEMODULATOR PACK C.B.A. (NV-G21EG/EO/EV)

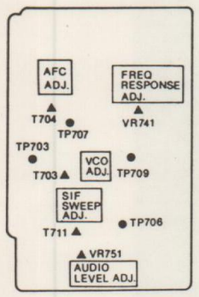

TUNER/ARU PACK C.B.A. (NV-G21EG/EO/EV)

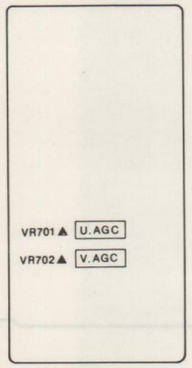

TV DEMODULATOR PACK C.B.A. (NV-G21B)

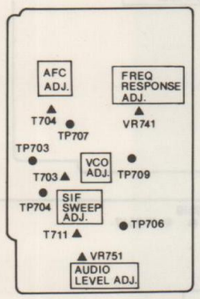

TUNER/ARU PACK C.B.A. (NV-G21B)

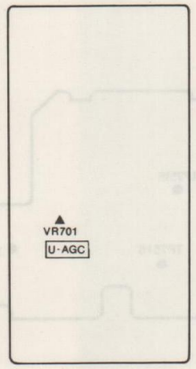

MUTING C.B.A.

TV DEMODULATOR SECTION

Since different models, such as NV–G21EG/EV/EO/B are combined into one procedure, pay attention not to adjust different specifications.

2-4-17. TEST EQUIPMENT

To make adjustment completely, following equipments are required.

1. VIF SWEEP GENERATOR with the Trap Adjustor
   .....38.9MHz (EG/EV/EO)
   .....39.5MHz (B)
2. SIF SWEEP GENERATOR
   .....5.5MHz +– 150KHz (EG/EV/EO)
   .....6.0MHz +– 150KHz (B)
3. CW OSCILLATOR
   .....38.9MHz +– 100KHz (EG/EV/EO)
   .....39.5MHz +– 100KHz (B)
4. MONITOR SCOPE
5. OSCILLOSCOPE
6. DIGITAL VOLT METER
7. TUNING AMPLIFIER
8. MULTI VOICE MODULATOR (M.V.M)

Note:
1) Demodulator Unit Setting

To make this adjustment, set the Demodulator Unit as follows.
First, remove the Demodulator Unit (Tuner, RF Converter, TV Demodulator C.B.A and Tuner ARU C.B.A) from the Main C.B.A. Then, connect the TV Demodulator Pack pin to solder the same portions of the Main C.B.A by lead jumper.

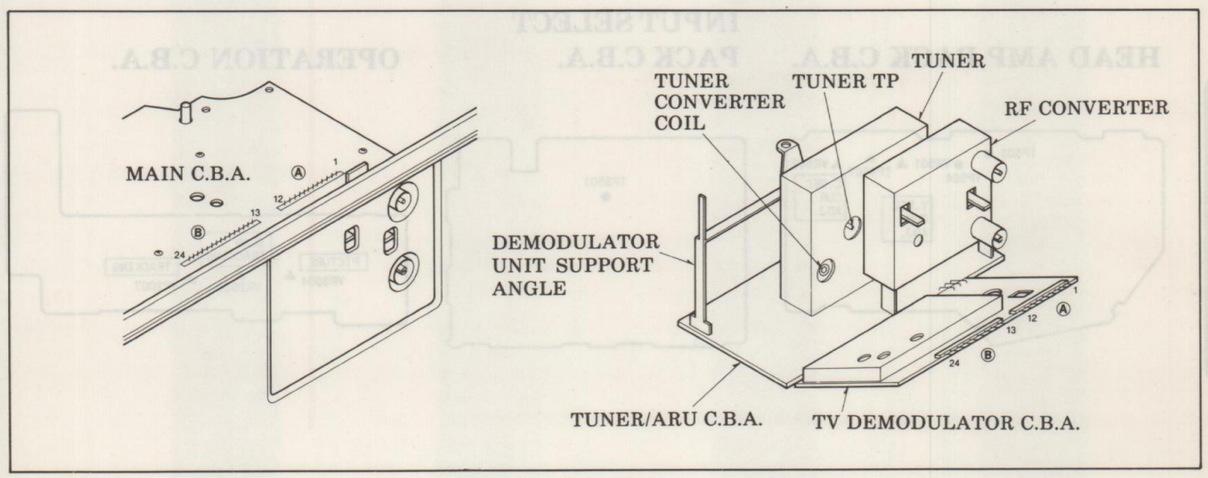

Fig . E15

2) AFC ON–OFF

When you make AFC ON or OFF condition, set the VTR as follows.

* In case of NV–G21 EG/EV/EO.

(1) Press the START/OFF button.
The indication on the Multi–Function Display changes from the clock indication to the position indication.
(2) Press the Channel Up or Down button to select a programme position (channel) which you want to tune to a TV station.
(3) Press the BAND/AFC button to select the "I", "III", "H" or "U" position.
("H" ... NV–G21EG only)

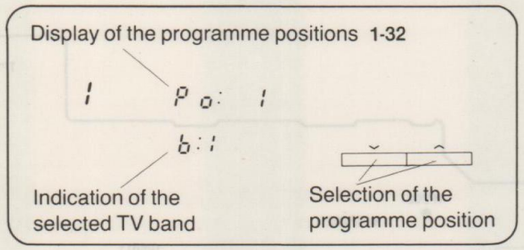

(4) Press the SEARCH (+) or (–) button until the picture of the desired station on your TV is satisfactory.
* If the Search (+) or (–) button is pressed while pressing the Quick Button, the stations will change quickly.

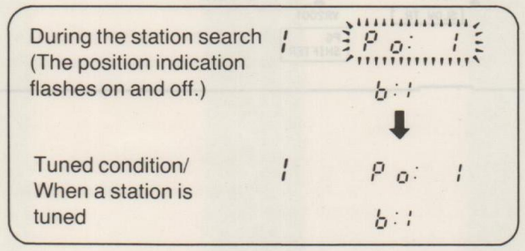

(5) Press the START/OFF button again.
The indication on the Multi–Function Display changes to the clock indication.
Now AFC is "ON" condition.
(6) Press the FINE TUNING (+) or (–) button in a moment.
Now AFC is "OFF" condition.
(7) Press the BAND/AFC button.
Now AFC is "ON" condition again.

* In case of NV–G21B.

(1) Set the AFC Jig after remove the TV Demodulator C.B.A.–(14) to cut of the AFC DEF signal from IC7501–(7).

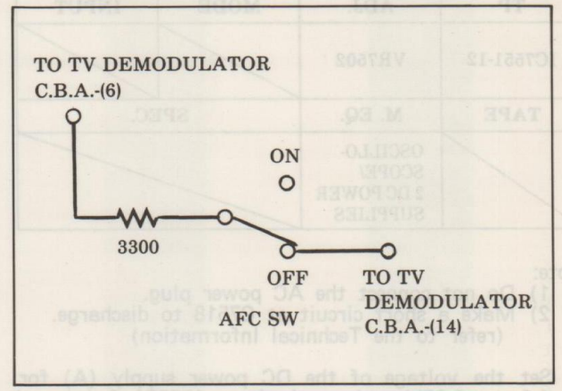

AFC JIG

(2) Press the PRESET/NORMAL button.
The indication on the Multi–Function Display changes from the clock indication to the position indication.
Then the AFC switch of the Jig to "OFF" position.
(3) Press the Channel Up or Down button to select a programme position (channel) which you want to tune to a TV station.

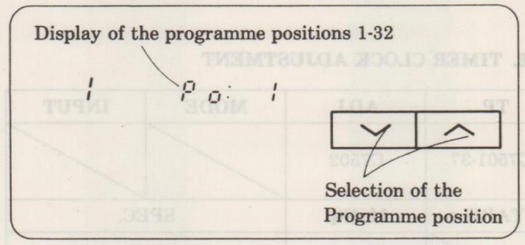

(4) Press the SEARCH (+) or (–) button until the picture of the desired station on your TV is satisfactory.
Then set the AFC switch of the AFC Jig to "ON" position and press the MEMORY button.

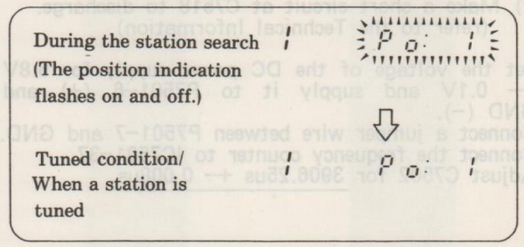

(5) Press the PRESET/NORMAL button again.
The indication on the Multi–Function Display changes to the clock indication.
Now AFC is "ON" condition.
(6) Set the AFC switch of the AFC Jig to "OFF" position.
Now AFC is "OFF" condition.
(7) Set the AFC switch of the AFC Jig to "ON" position again.
Now AFC is "ON" condition again.

www.freeservicemanuals.info

2-4-18. VIF SWEEP ADJUSTMENT

TP	ADJ.	MODE	INPUT
TP707	T703, TUNER CONVERTER COIL (EV/EO/B), X717 (EG)		VIF SWEEP
TAPE	**M. EQ.**	**SPEC.**	
	VIF SWEEP/ MONITOR SCOPE	Refer to VIF Specification chart. (Fig. E-20)	

1. Set the BAND SW for VHF position (EG:I, EV/EO:III) and set the DC power supply for 15V and suplly it to BT Terminal of the Tuner after removing TV Demodulator C.B.A −(9) to cut off the BT voltage from IC7551−(2).
2. Set the AFC OFF condition.
3. Connect a jumper wire between AGC Terminal of the Tuner and GND.
4. Connect a capasitor (50V/1 uF) between TP703 and GND.
5. Connect the VIF sweep generator to the Tuner Test Point and connect the monitor scope to TP707 as shown in Fig. E16.
   (Marker Frequency of VIF Sweep waveform is shown in Fig. E17)

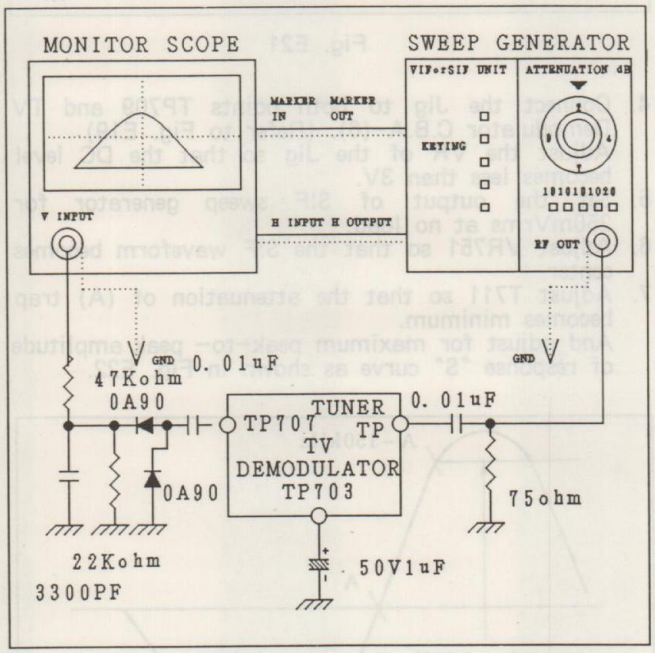

Fig. E16

MODEL NO.		EG/EV/EO	B
MARKER FREQUENCY	fs′	40.4 MHz	41.5 MHz
	fp	38.9 MHz	39.5 MHz
	f1	38.15 MHz	38.6 MHz
	f2	35.22 MHz	35.5 MHz
	fc	34.47 MHz	35.07 MHz
	f3	33.97 MHz	34.57 MHz
	fs	33.4 MHz	33.5 MHz
	fp′	31.9 MHz	31.5 MHz

Fig. E17

6. Adjust T703 so that the VCO beat is placed to centre of P1 and P2 mackers on the output waveform as shown in Fig. E18.

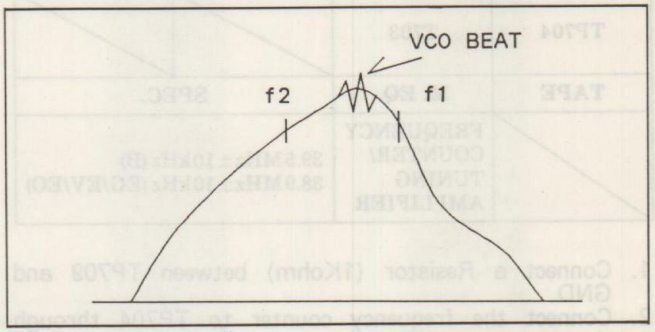

Fig. E18

7. Adjust the VIF sweep generator so that the output sweep waveform level becomes 0.3Vp−p on the monitor scope.
   Then release the attenuator of the VIF sweep generator for 20dB.
8. Connect the Adjustment Jig as shown in Fig. E19, then adjust VR of Adjustment Jig so that the output sweep waveform level becomes 0.3Vp−p on the monitor scope.

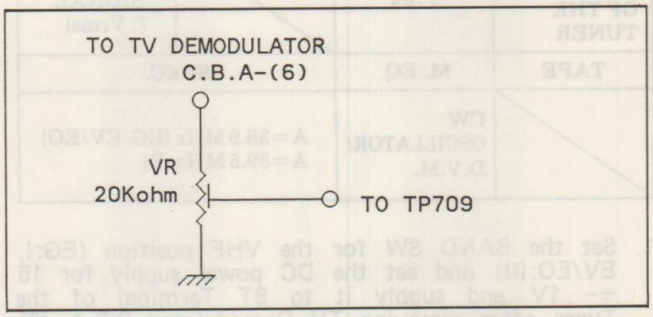

Fig. E19

9. Adjust the Tuner Converter Coil (EV/EO/B) or X717 (EG) so that the waveform becomes as follows.

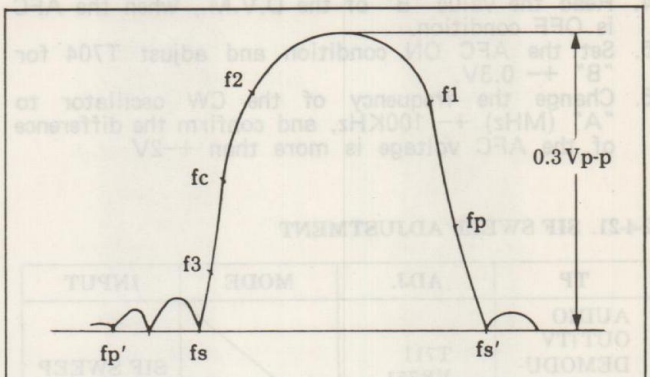

VIF WAVEFORM

MODEL No.		EG	EV/EO	B
SPECIFICATIONS	fp	30±5%	30±5%	30±5%
	f1	—	60~80%	60~80%
	f2	—	50~70%	60~90%
	fc	25~45%	20~40%	35~50%
	f3	—	5~20%	—

Fig. E20

www.freeservicemanuals.info

2-4-19. VCO ADJUSTMENT

TP	ADJ.	MODE	INPUT
TP704	T703		
TAPE	**M. EQ.**	**SPEC.**	
	FREQUENCY COUNTER/ TUNING AMPLIFIER	39.5MHz±10kHz (B) 38.9MHz±10kHz (EG/EV/EO)	

1. Connect a Resistor (1Kohm) between TP709 and GND.
2. Connect the frequency counter to TP704 through the tuning amplifier.
3. Adjust T703 so that the reading of frequency counter is 38.9MHz +− 10KHz (EG/EV/EO) or 39.5MHz +− 10KHz (B).

2-4-20. AFC ADJUSTMENT

TP	ADJ.	MODE	INPUT
AFC TERMINAL OF THE TUNER	T704		CW SIGNAL (1Vrms)
TAPE	**M. EQ.**	**SPEC.**	
	CW OSCILLATOR/ D.V.M.	A=38.9MHz (EG/EV/EO) A=39.5MHz (B)	

1. Set the BAND SW for the VHF position (EG:I, EV/EO:III) and set the DC power supply for 15 +− 1V and supply it to BT Terminal of the Tuner after removing TV Demodulator C.B.A−(9) to cut of the BT voltage from IC7551−(2).
2. Set the CW oscillator output for "A" MHz and 1Vrms. Connect the CW oscillator output to the Tuner Test Point.
3. Connect the D.V.M. to the AFC terminal of the tuner.
4. Read the value "B" of the D.V.M., when the AFC is OFF condition.
5. Set the AFC ON condition and adjust T704 for "B" +− 0.3V.
6. Change the frequency of the CW oscillator to "A" (MHz) +− 100KHz, and confirm the difference of the AFC voltage is more than +−2V

2-4-21. SIF SWEEP ADJUSTMENT

TP	ADJ.	MODE	INPUT
AUDIO OUT (TV DEMODU-LATOR C.B.A.-(15))	T711 VR751		SIF SWEEP
TAPE	**M. EQ.**	**SPEC.**	
	VIF SWEEP/ MONITOR SCOPE	A=5.5MHz (EG/EV/EO) A=6.0MHz (B)	

1. Set the DC power supply for 15 +− 1V and supply it to BT Terminal of the Tuner after removing TV Demodulator C.B.A −(9) to cut of the BT voltage from IC7551 − (2).
2. Set the AFC OFF condition.
3. Connect the SIF sweep generator to TP706 and connect the monitor scope to TV Demodulator C.B.A−(15) as shown in Fig. E21.

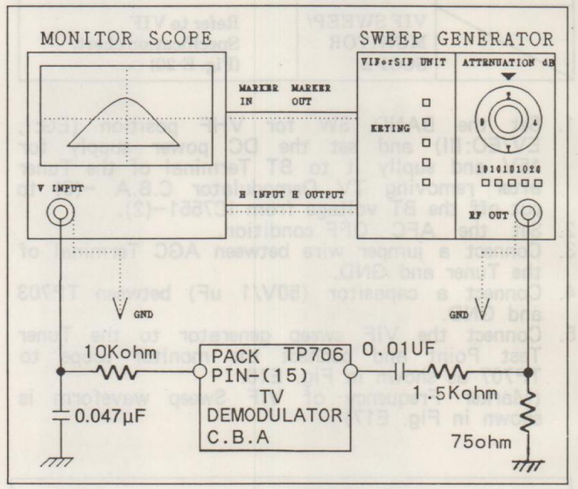

Fig. E21

4. Connect the Jig to both points TP709 and TV Demodulator C.B.A−(6). (Refer to Fig. E19) Adjust the VR of the Jig so that the DC level becomes less than 3V.
5. Set the output of SIF sweep generator for 250mVrms at no load.
6. Adjust VR751 so that the SIF waveform becomes center.
7. Adjust T711 so that the attenuation of (A) trap becomes minimum.
   And adjust for maximum peak−to− peak amplitude of response "S" curve as shown in Fig. E22.

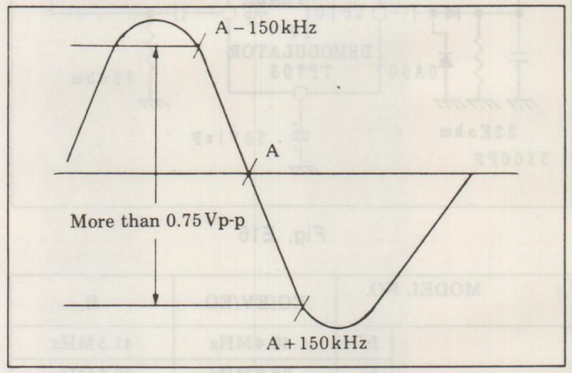

Fig. E22

8. Confirm that the level between (A) +− 150KHz marker position is more than 0.75Vp−p.

2-4-22. VIDEO FREQUENCY RESPONSE ADJUSTMENT

TP	ADJ.	MODE	INPUT
TV DEMODU-LATOR C.B.A.-(13)	VR741		VIDEO SWEEP V. MOD: 70%, 75dBμ
TAPE	**M. EQ.**	**SPEC.**	
	OSCILLO-SCOPE/ VIDEO SWEEP/ M.V.M		

1. Supply a video sweep signal from the Video sweep generator to the input of the M.V.M.
2. Connect the output of the M.V.M to RF Input of the Deck.
3. Press the SEARCH (+) or (−) button so that the modulated RF signal on the channel 10 (NV−G21EG/EV/EO) or 60 (NV−G21B) is able to receive.
4. Set the AFC ON condition.
5. Adjust VR741 so that the waveform at the Video out (TV Demodulator C.B.A−(13)) becomes as shown in Fig. E23.

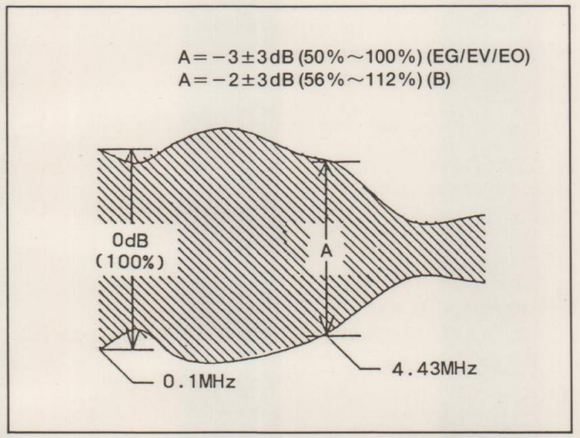

Fig. E23

2-4-23. AUDIO LEVEL ADJUSTMENT

TP	ADJ.	MODE	INPUT
AUDIO OUT (TV DEMODU-LATOR C.B.A.-(15))	VR751		VIDEO COLOUR BAR V. MODU: 87.5%, 75dBμ AUDIO 400Hz A. MODU: 30% (60%, 100%) (15kHz DEV)
TAPE	**M. EQ.**	**SPEC.**	
	RC OSC/ OSCILLO-SCOPE or D.V.M/ M.V.M/ PATTERN GENERATOR		

1. Supply a video signal (COLOUR BAR pattern) from the pattern generator and 400Hz sine wave from RC oscillator to the input of the M.V.M.
2. Connect the output of the M.V.M to RF Input of the Deck.
3. Press the SEARCH (+) or (−) button so that the modulated RF signal on the channel 10 (NV−G21EG/EV/EO) or 60 (NV−G21B) is able to receive.
4. Set the AFC ON condition.
5. Connect the oscilloscope or D.V.M to TV Demodulator C.B.A−(15).
6. Adjust VR751 so that the audio level becomes as shown below.

DEV / M. EQ.	30%	60%	100%
OSCILLO-SCOPE	100±5mVp-p	200±5mVp-p	333±17mVp-p
D.V.M	35±2mVrms	70±4mVrms	117±6mVrms

2-4-24. AUDIO MUTING FREQUENCY ADJUSTMENT

TP	ADJ.	MODE	INPUT
IC7651-④	VR7660		
TAPE	**M. EQ.**	**SPEC.**	
	FREQUENCY COUNTER	15625±50Hz	

Note:
To make this adjustment, please prepare the following circuit as shown in Fig. E24.

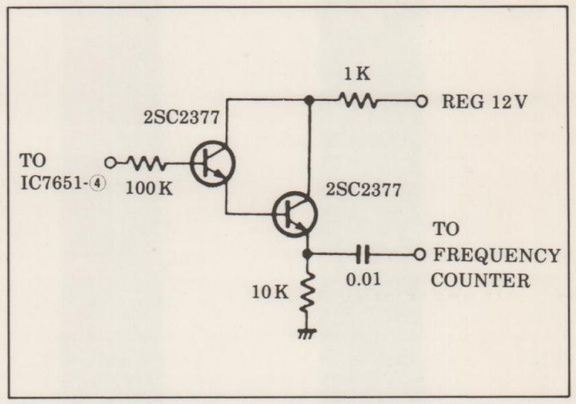

Fig. E24

www.freeservicemanuals.info

Memo

www.freeservicemanuals.info

SECTION 3
BLOCK DIAGRAMS & SCHEMATIC DIAGRAMS

3-1. SYSTEM CONTROL BLOCK DIAGRAM

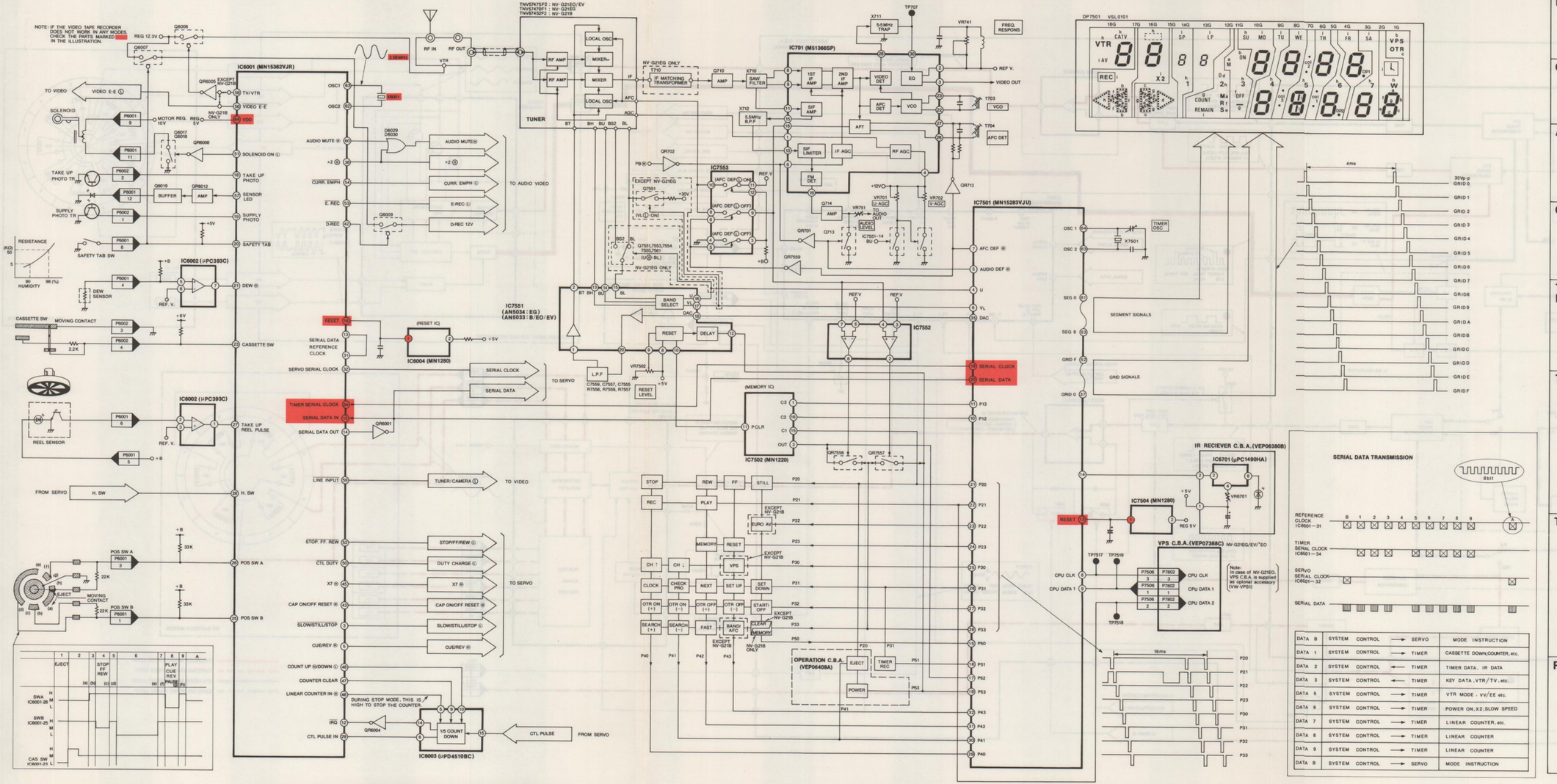

DATA B	SYSTEM CONTROL → SERVO	MODE INSTRUCTION
DATA 1	SYSTEM CONTROL → TIMER	CASSETTE DOWN,COUNTER, etc.
DATA 2	SYSTEM CONTROL ← TIMER	TIMER DATA, IR DATA
DATA 3	SYSTEM CONTROL ← TIMER	KEY DATA, VTR/TV, etc.
DATA 5	SYSTEM CONTROL → TIMER	VTR MODE - VV/EE etc.
DATA 6	SYSTEM CONTROL → TIMER	POWER ON, X2, SLOW SPEED
DATA 7	SYSTEM CONTROL → TIMER	LINEAR COUNTER, etc.
DATA 8	SYSTEM CONTROL → TIMER	LINEAR COUNTER
DATA 9	SYSTEM CONTROL → TIMER	LINEAR COUNTER
DATA B	SYSTEM CONTROL → SERVO	MODE INSTRUCTION

SYMBOL	TRUTH VALUE TABLE
INVERTER	IN (a) H L; OUT (b) L H
COMPARTOR	IN (a)(b) (a)>(b) (a)<(b); OUT (c) H L
AND CIRCUIT	IN (a)(b) L L H H / L H L H; OUT (c) L L L H
OR CIRCUIT	IN (a)(b) L L H H / L H L H; OUT (c) L H H H
THREE STATES BUFFER	IN (a)(b) H L H or L / L L H; OUT (c) H L ※ ; ※ High Impedance
TR. SW (NPN TYPE)	BASE H L; TR. SW ON OFF
TR. SW (PNP TYPE)	BASE H L; TR. SW OFF ON
R-S TYPE FLIP-FLOP	IN (a)(b) L L ⎍ / L ⎍ L; OUT (c) ※ L H; (d) ◆ H L; ※ Initial condition is maintained. ◆ Initial condition is reverced.

Next Page: SERVO Section

3—1

www.freeservicemanuals.info

3-2. SERVO BLOCK DIAGRAM

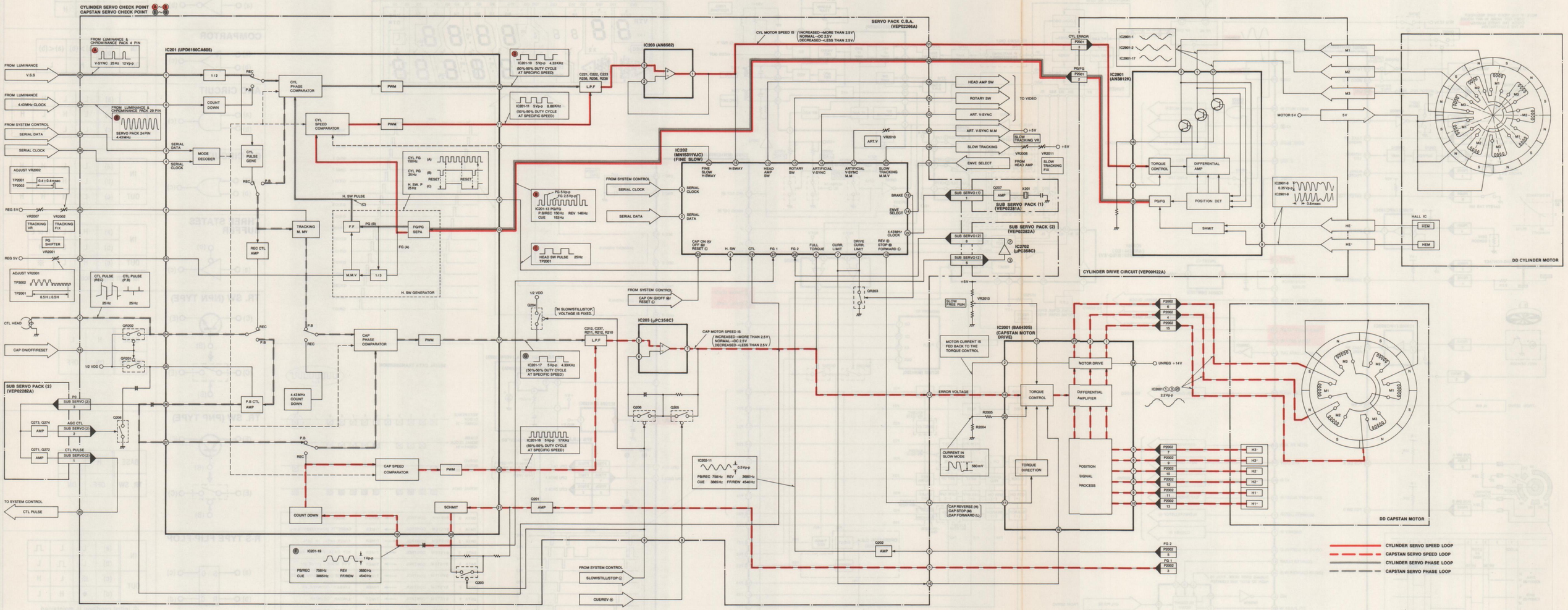

3—2

www.freeservicemanuals.info

3-3. LUMINANCE & CHROMINANCE BLOCK DIAGRAM

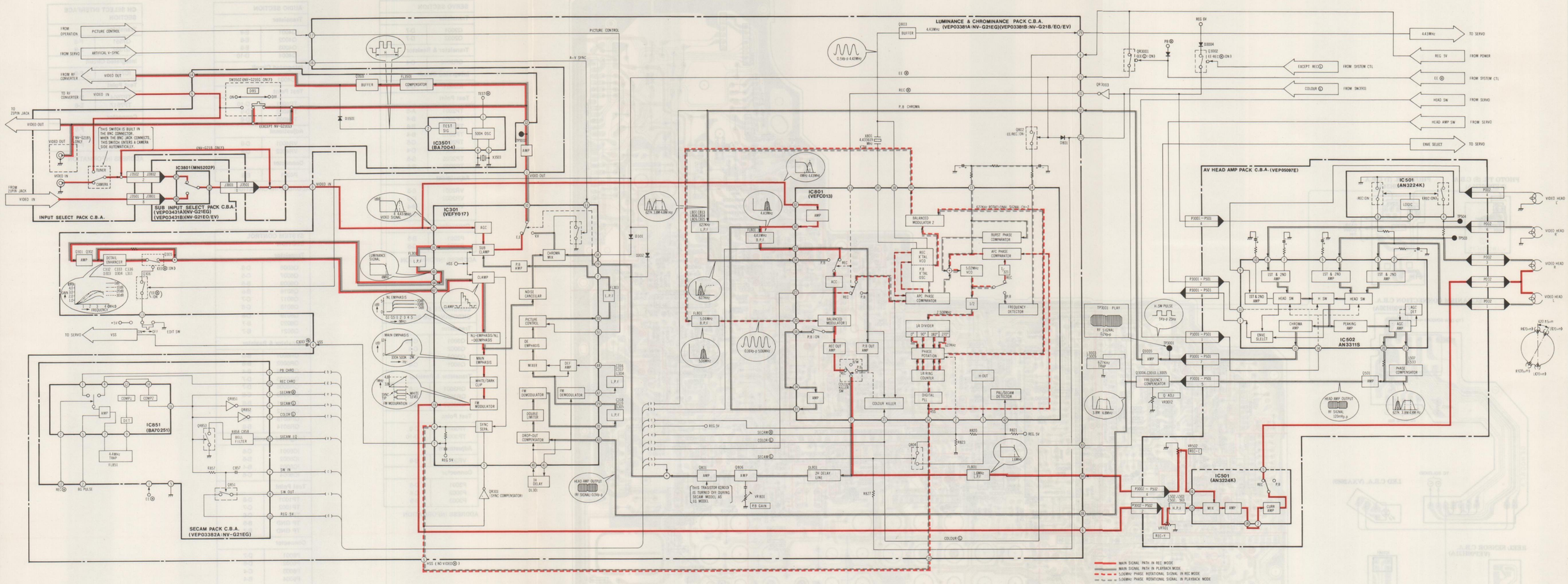

3—3

Next Page:
MAIN C.B.A. Section

www.freeservicemanuals.info

3-4. MAIN C.B.A. (VEP03440A : NV-G21EG) (VEP03440C : NV-G21B) (VEP03440B : NV-G21EO/EV)

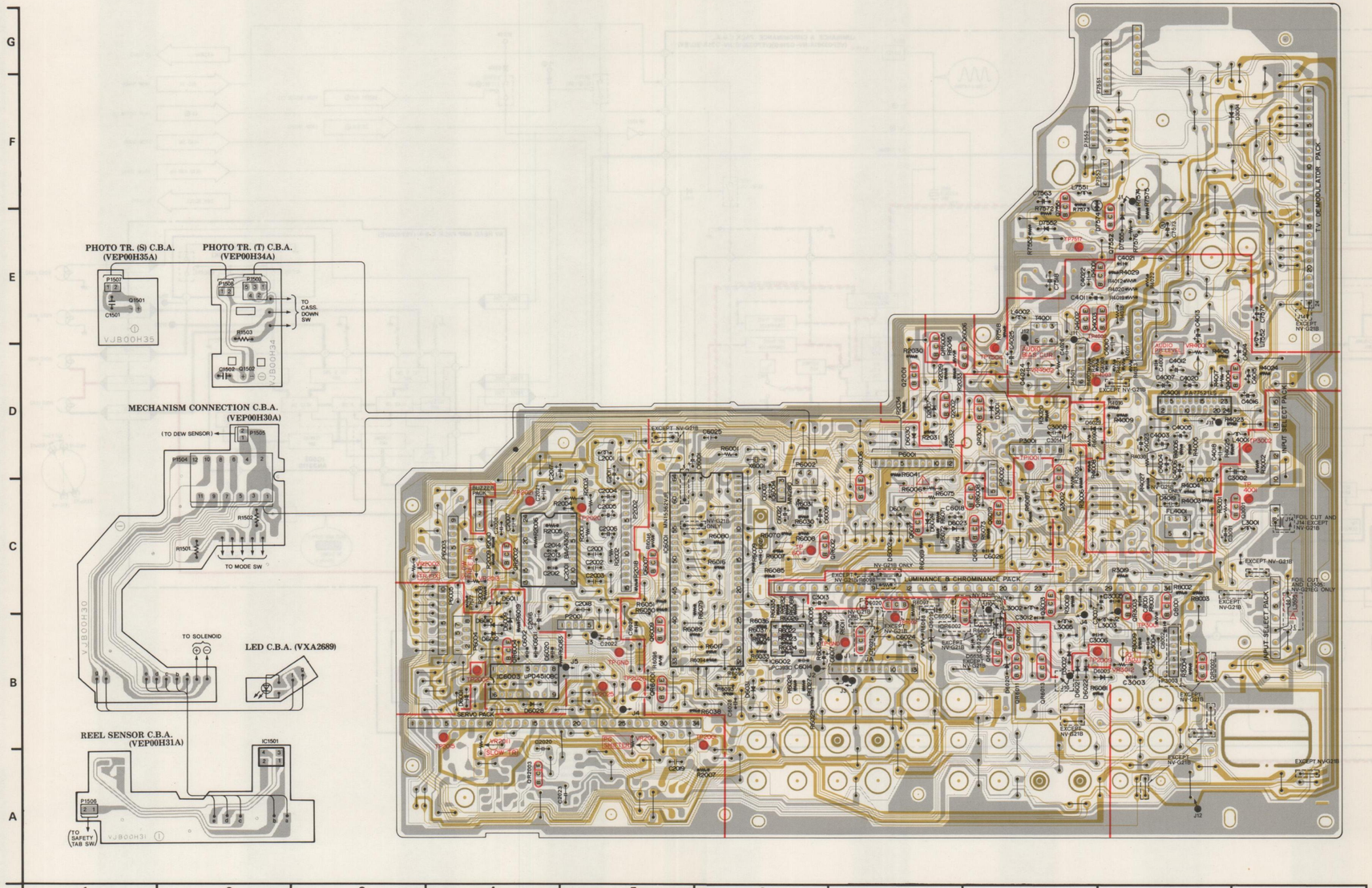

MAIN C.B.A. ADDRESS INFORMATIONS

SERVO SECTION	
Transistor	
Q2001	D-7
Q2002	D-7
Transistor & Resistor	
QR2002	C-4
Integrated Circuit	
IC2001	C-4
Test Point	
TP2001	A-6
TP2002	B-4
TP2009	B-8
TP2015	B-4
TP2020	C-5
TP2021	C-4
TP2025	B-5
TP2026	B-5
Adjustment	
VR2001	B-5
VR2002	C-3
VR2011	B-4
VR2013	C-4
Connector	
P2001	B-5
P2002	C-5

ADDRESS INFORMATION

LUMINANCE & CHROMINANCE SECTION	
Transistor	
Q3001	C-10
Q3002	C-8
Q3003	C-8
Q8001	C-9
Transistor & Resistor	
QR3001	D-8
QR3002	B-9
QR3003	C-9
Test Point	
TP3001	C-9
TP3002	D-10
Adjustment	
VR3012	B-9
Connector	
P3001	D-8
P3002	C-8
P3003	B-9

ADDRESS INFORMATION

AUDIO SECTION	
Transistor	
Q4001	E-9
Q4002	E-8
Q4003	E-9
Q4004	D-10
Integrated Circuit	
IC4001	D-9
Test Point	
TP4001	C-10
TP4002	D-9
TP4003	D-9
Adjustment	
VR4001	D-9
VR4002	D-8
Connector	
P4001	E-8

ADDRESS INFORMATION

SYSTEM CONTROL SECTION	
Transistor	
Q6006	D-8
Q6007	C-5
Q6009	B-5
Q6016	B-8
Q6017	C-7
Q6018	C-8
Q6019	C-8
Q6020	B-7
Q6021	B-7
Transistor & Resistor	
QR6001	B-5
QR6002	B-8
QR6004	B-4
QR6005	D-7
QR6006	D-7
QR6008	C-8
QR6011	B-8
QR6012	C-6
QR6013	B-8
QR6014	B-8
Integrated Circuit	
IC6001	C-6
IC6002	B-6
IC6003	B-4
IC6004	C-6
Test Point	
TP1001	D-8
TP1002	C-7
TP6011	C-6
TP GND	B-5
TP GND	B-7
Connector	
P6001	D-7
P6002	D-6
P6003	C-4
P6004	B-4
P6005	B-4
JA	B-7

ADDRESS INFORMATION

CH SELECT INTERFACE SECTION	
Transistor	
Q7551	F-8
Q7552	E-9
Integrated Circuit	
IC7551	F-9
Test Point	
TP7504	D-8
TP7517	E-8
Connector	
P7551	F-9
P7552	F-9
P7553	F-9

ADDRESS INFORMATION

3—4

www.freeservicemanuals.info

3-5. POWER SCHEMATIC DIAGRAM

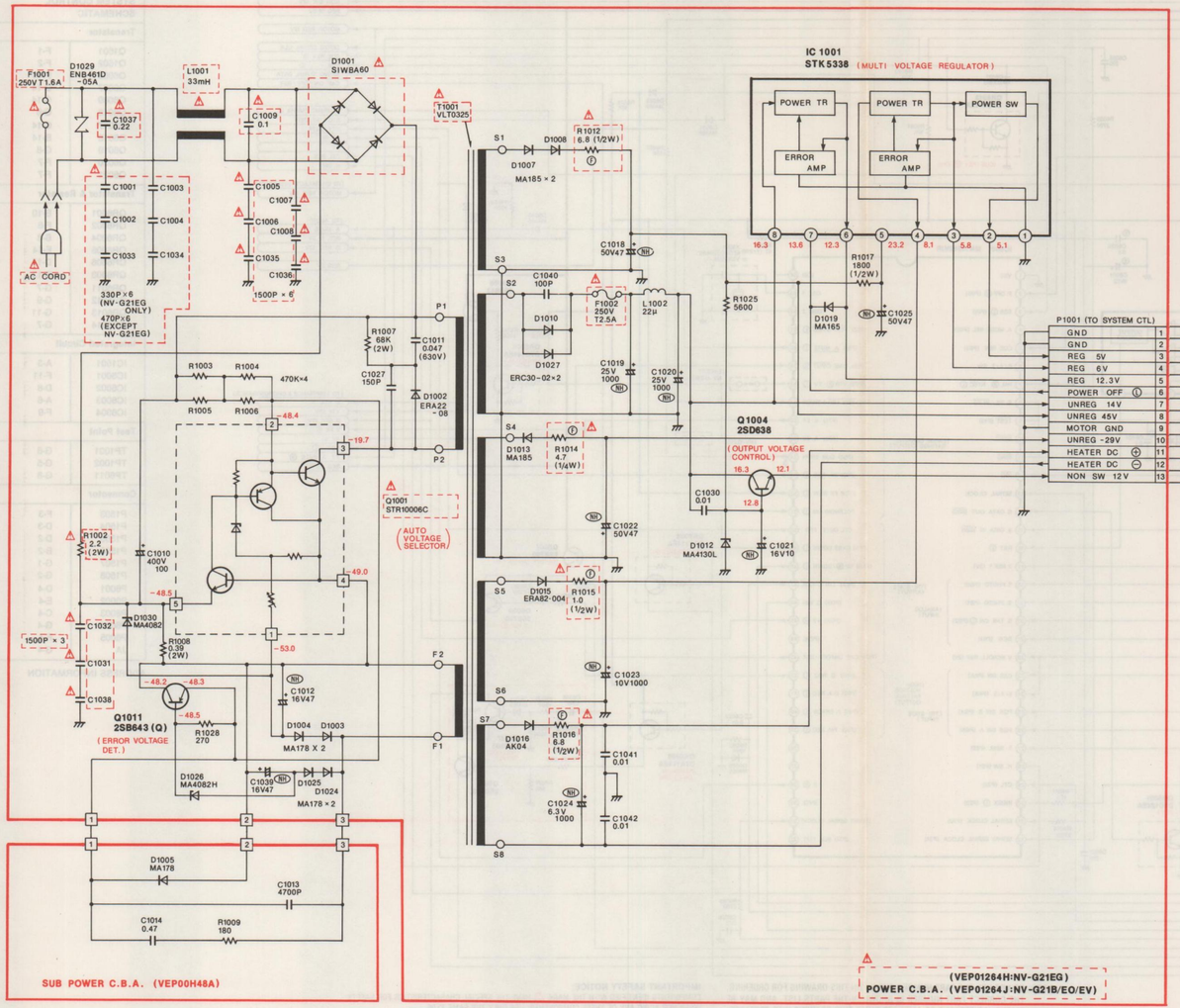

NOTE: THE MEASUREMENT MODE OF THE DC VOLTAGE ON THIS DIAGRAM IS STOP MODE.

IMPORTANT SAFETY NOTICE:
COMPONENTS IDENTIFIED WITH THE MARK ⚠ HAVE THE SPECIAL CHARACTERISTICS FOR SAFETY. WHEN REPLACING ANY OF THESE COMPONENTS, USE ONLY THE SAME TYPE.

NOTE: DO NOT USE THE PART NUMBER SHOWN ON THIS DRAWING FOR ORDERING. THE CORRECT PART NUMBER IS SHOWN IN THE PARTS LIST, AND MAY BE SLIGHTLY DIFFERENT OR AMENDED SINCE THIS DRAWING WAS PREPARED.

3-6. POWER C.B.A. (VEP01264H: NV-G21EG) (VEP01264J: NV-G21B/EO/EV)

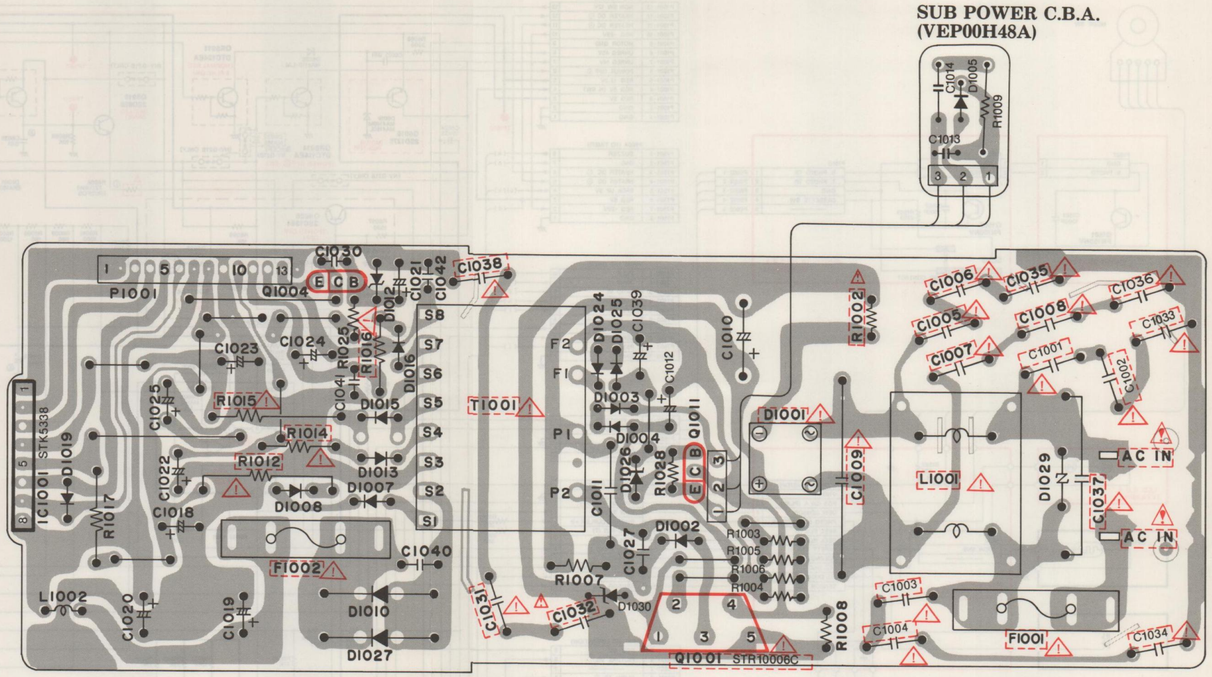

Next Page:
SYSTEM CONTROL Section

www.freeservicemanuals.info

3-7. SYSTEM CONTROL SCHEMATIC DIAGRAM

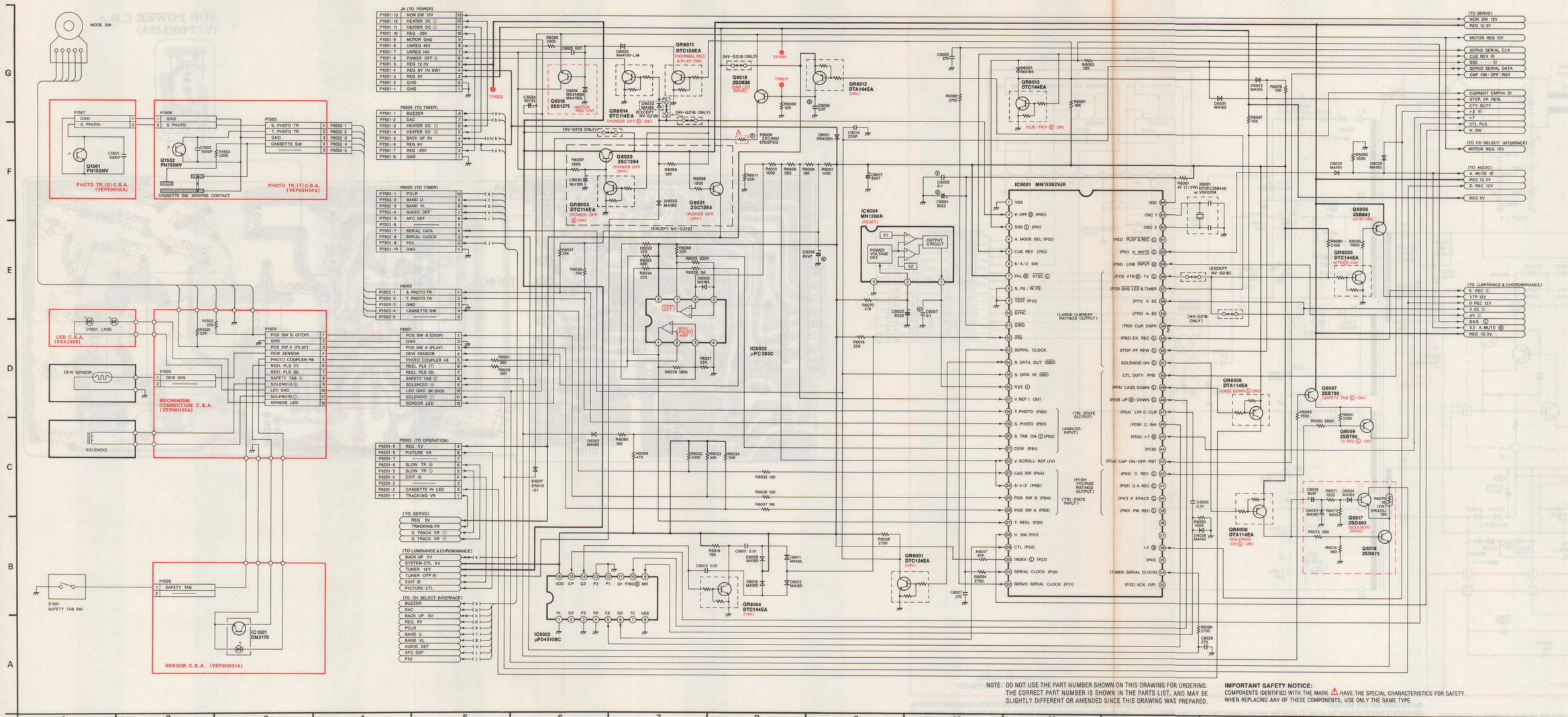

SYSTEM CONTROL SCHEMATIC	
Transistor	
Q1501	F-1
Q1502	F-2
Q6006	F-14
Q6007	D-14
Q6009	C-14
Q6016	G-6
Q6017	C-14
Q6018	B-14
Q6019	G-8
Q6020	F-7
Q6021	F-7
Transistor & Resistor	
QR6001	B-10
QR6002	F-6
QR6004	B-8
QR6005	E-14
QR6006	D-13
QR6008	B-13
QR6011	G-7
QR6012	G-9
QR6013	G-11
QR6014	G-7
Integrated Circuit	
IC1501	A-3
IC6001	F-11
IC6002	D-8
IC6003	A-6
IC6004	F-9
Test Point	
TP1001	G-8
TP1002	G-5
TP6011	G-8
Connector	
P1503	F-3
P1504	D-3
P1505	D-2
P1506	B-2
P1507	G-1
P1508	G-2
P6001	D-4
P6002	E-4
P6003	C-4
P6004	G-4
P6005	F-4
JA	G-4

ADDRESS INFORMATION

NOTE: DO NOT USE THE PART NUMBER SHOWN ON THIS DRAWING FOR ORDERING. THE CORRECT PART NUMBER IS SHOWN IN THE PARTS LIST, AND MAY BE SLIGHTLY DIFFERENT OR AMENDED SINCE THIS DRAWING WAS PREPARED.

IMPORTANT SAFETY NOTICE:
COMPONENTS IDENTIFIED WITH THE MARK ⚠ HAVE THE SPECIAL CHARACTERISTICS FOR SAFETY. WHEN REPLACING ANY OF THESE COMPONENTS, USE ONLY THE SAME TYPE.

3—6

www.freeservicemanuals.info

3-8. SYSTEM CONTROL Section In Main C.B.A. (VEP03440A: NV-G21EG) (VEP03440C: NV-G21B) (VEP03440B: NV-G21EO/EV)

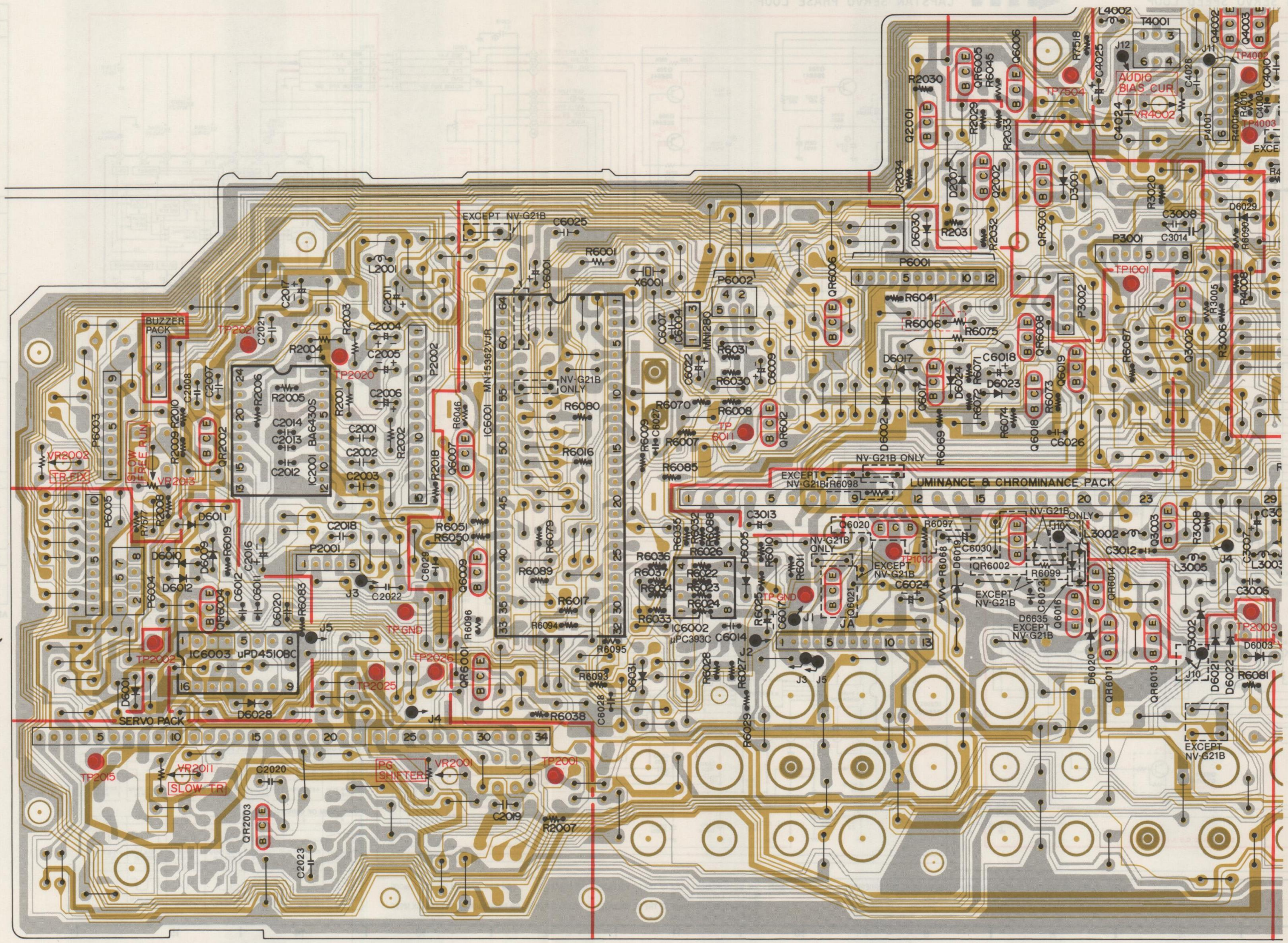

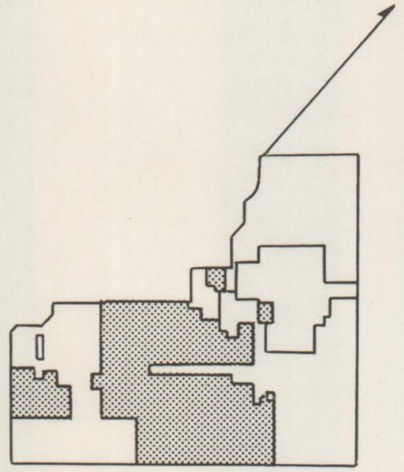

SYSTEM CONTROL Section ICs VOLTAGE CHART

REF. NO. / MODE	IC6001 1	2	3	4	5	6	7	8	9	10	11	12	13	14	15	16	17	18	19	20
STOP	0	0	0	0	0	0.1	5.1	5.0	4.9	4.0	4.9	5.0	4.6	0.2	4.7	5.0	2.8	3.1	3.1	0.5
PLAY	0	0	4.9	0	0	0.2	5.0	5.0	4.9	4.0	4.9	5.0	4.6	0.3	4.7	5.0	2.9	3.1	3.1	0.5
REC	0	0	4.9	0	0	0.2	5.0	5.0	4.9	3.9	4.9	4.9	4.6	0.2	4.7	5.0	2.9	3.1	3.1	0.5
F.F	0	0	4.9	0	0	0.2	5.0	5.0	4.9	4.0	4.9	4.9	4.6	0.2	4.7	5.0	2.8	3.1	3.1	0.5
REW	0	0	4.9	0	0	0.2	5.0	5.0	4.9	4.0	4.9	4.9	4.6	0.3	4.8	5.0	2.8	3.1	3.1	0.5

REF. NO. / MODE	IC6001 21	22	23	24	25	26	27	28	29	30	31	32	33	34	35	36	37	38	39	40
STOP	0	2.0	5.0	2.0	2.0	5.0	0	0	0	5.0	4.5	4.8	4.7	4.7	0	0	4.9	4.9	0.2	0.2
PLAY	0	2.0	5.0	2.0	5.0	0	2.5	2.5	2.5	5.0	4.6	4.9	4.7	4.7	0	0	4.9	4.9	0.3	0.3
REC	0	2.0	5.1	2.0	5.0	0	0	2.3	2.5	5.0	4.6	4.8	4.7	4.7	0	0	4.9	4.9	0	0
F.F	0	2.0	5.0	2.0	2.0	5.0	2.5	0	2.5	5.0	4.6	4.8	4.8	4.7	0	0	4.9	4.9	0.3	0.3
REW	0	2.0	5.0	2.0	2.0	5.0	3.5	0	2.5	5.0	4.6	4.8	4.8	4.7	0	0	4.9	4.9	0.2	0.2

REF. NO. / MODE	IC6001 41	42	43	44	45	46	47	48	49	50	51	52	53	54	55	56	57	58	59	60
STOP	0.2	12.3	1.9	0	0	4.9	4.9	0	2.4	4.9	5.0	0	0.3	0	0.2	0	4.4	4.8	4.9	0
PLAY	0.3	12.3	4.9	0	0.1	0	4.9	4.9	2.4	4.9	5.0	4.4	0.3	4.8	0	5.1	4.4	4.8	4.9	0
REC	0	0.2	4.9	0	0.1	0	4.9	4.9	2.4	4.9	5.0	4.5	5.3	4.8	0.4	0	4.3	4.8	4.9	0
F.F	0.3	12.3	4.9	0	0.1	0	4.9	0	2.4	4.9	5.0	0	0.3	0	0.2	0	4.3	4.8	4.9	0
REW	0.2	12.3	4.9	0	0.1	0	4.9	0	2.4	4.9	5.0	0	0.3	0	0.2	0	4.5	4.8	4.9	0

REF. NO. / MODE	IC6001 61	62	63	64	IC6002 1	2	3	4	5	6	7	8
STOP	4.9	2.0	2.2	4.9	0	4.4	2.4	0	0	0.3	0	5.0
PLAY	4.9	2.0	2.2	4.9	2.4	2.2	2.4	0	0	0.3	0	5.1
REC	4.9	2.0	2.2	4.9	2.4	2.2	2.5	0	0	0.3	0	5.1
F.F	4.9	2.0	2.2	4.9	3.0	2.4	2.5	0	0	0.3	0	5.1
REW	4.9	2.0	2.2	4.9	2.3	2.4	2.5	0	0	0.3	0	5.0

REF. NO. / MODE	IC6003 1	2	3	4	5	6	7	8	9	10	11	12	13	14	15	16
STOP	0	5.1	0	0	4.9	0	5.0	0	0	0	0	0	0	0	0.5	5.1
PLAY	0	2.5	0	0	0	2.5	5.1	0	0	2.5	0	0	0	2.5	0.4	2.5
REC	0	0	0	0	0	2.5	5.0	0	0	4.9	5.0	0	0	2.5	3.3	5.1
F.F	0	1.2	0	0	0	2.5	4.5	0	0	4.9	2.1	0	0	2.5	1.1	5.1
REW	0	0.9	0	0	0	2.5	4.5	0	0	0	2.1	0	0	2.2	1.2	5.1

REF. NO. / MODE	IC6004 1	2	3
STOP	5.0	5.0	0
PLAY	5.0	5.0	0
REC	5.0	5.0	0
F.F	5.0	5.0	0
REW	5.0	5.0	0

SYSTEM CONTROL Section TRs VOLTAGE CHART

REF. NO.	Q6006			Q6007			Q6009			Q6016			Q6017			Q6018		
MODE	E	C	B	E	C	B	E	C	B	E	C	B	E	C	B	E	C	B
STOP	12.2	12.2	11.5	12.2	12.2	11.5	12.2	0.2	12.2	13.2	15.5	14.4	13.2	13.2	3.7	0	13.2	0
PLAY	12.2	12.2	11.5	12.2	12.2	11.5	12.2	0.2	12.2	9.9	15.1	11.2	9.8	9.8	0.9	0	9.8	0
REC	12.1	12.1	11.4	12.1	12.0	11.3	12.0	12.0	11.3	9.9	15.0	11.2	9.9	9.9	0.8	0	9.9	0
F.F	12.2	12.2	11.5	12.2	12.2	11.5	12.2	0.1	12.2	13.3	15.2	14.5	13.3	13.3	3.7	0	13.3	0
REW	12.2	12.2	11.5	12.2	12.2	11.5	12.2	0	12.2	13.2	15.3	14.5	13.2	13.2	3.7	0	13.2	0

REF. NO.	Q6019			Q6020			Q6021		
MODE	E	C	B	E	C	B	E	C	B
STOP	0.7	13.2	0.6	12.2	12.3	12.9	5.0	5.1	4.4
PLAY	0.7	9.8	0.6	12.2	12.3	12.9	5.0	5.1	5.8
REC	0.7	9.9	0.7	12.2	12.3	12.9	5.0	5.1	5.8
F.F	0.7	13.3	0.7	12.2	12.3	12.9	5.0	5.1	5.8
REW	0.7	13.2	0.6	12.2	12.3	12.9	5.0	5.1	5.8

REF. NO.	QR6001			QR6002			QR6004			QR6005			QR6006			QR6008		
MODE	E	C	B	E	C	B	E	C	B	E	C	B	E	C	B	E	C	B
STOP	0	4.7	0.3	0	12.9	0	0	5.0	0	0	0.1	4.7	5.0	4.9	0.1	5.0	0	5.0
PLAY	0	4.7	0.3	0	12.9	0	0	3.0	2.0	0	0.1	4.7	5.0	4.8	0.1	5.0	0	5.0
REC	0	4.7	0.3	0	12.9	0	0	3.0	2.0	0	0.1	4.7	5.0	4.8	0.1	5.0	0	5.0
F.F	0	4.7	0.3	0	12.9	0	0	2.9	2.0	0	0.1	4.7	5.0	4.9	0.1	5.0	0	5.0
REW	0	4.7	0.3	0	12.9	0	0	2.9	2.0	0	0.1	4.7	5.0	4.8	0.1	5.0	0	5.0

REF. NO.	QR6011			QR6012			QR6013			QR6014		
MODE	E	C	B	E	C	B	E	C	B	E	C	B
STOP	0	3.8	0.6	5.0	0.6	4.4	0	0.6	0	0	13.6	0
PLAY	0	0.1	3.6	5.0	0.6	4.4	0	3.6	0	0	13.6	0
REC	0	0.1	3.6	5.0	0.7	4.4	0	3.6	0	0	13.6	0
F.F	0	3.8	0.7	5.0	0.7	4.4	0	0.7	0	0	13.6	0
REW	0	3.8	0.7	5.0	0.6	4.4	0	0.7	0	0	13.6	0

Next Page: SERVO Section

www.freeservicemanuals.info

3-9. SERVO SCHEMATIC DIAGRAM

CYLINDER SERVO SPEED LOOP
CAPSTAN SERVO SPEED LOOP
CYLINDER SERVO PHASE LOOP
CAPSTAN SERVO PHASE LOOP

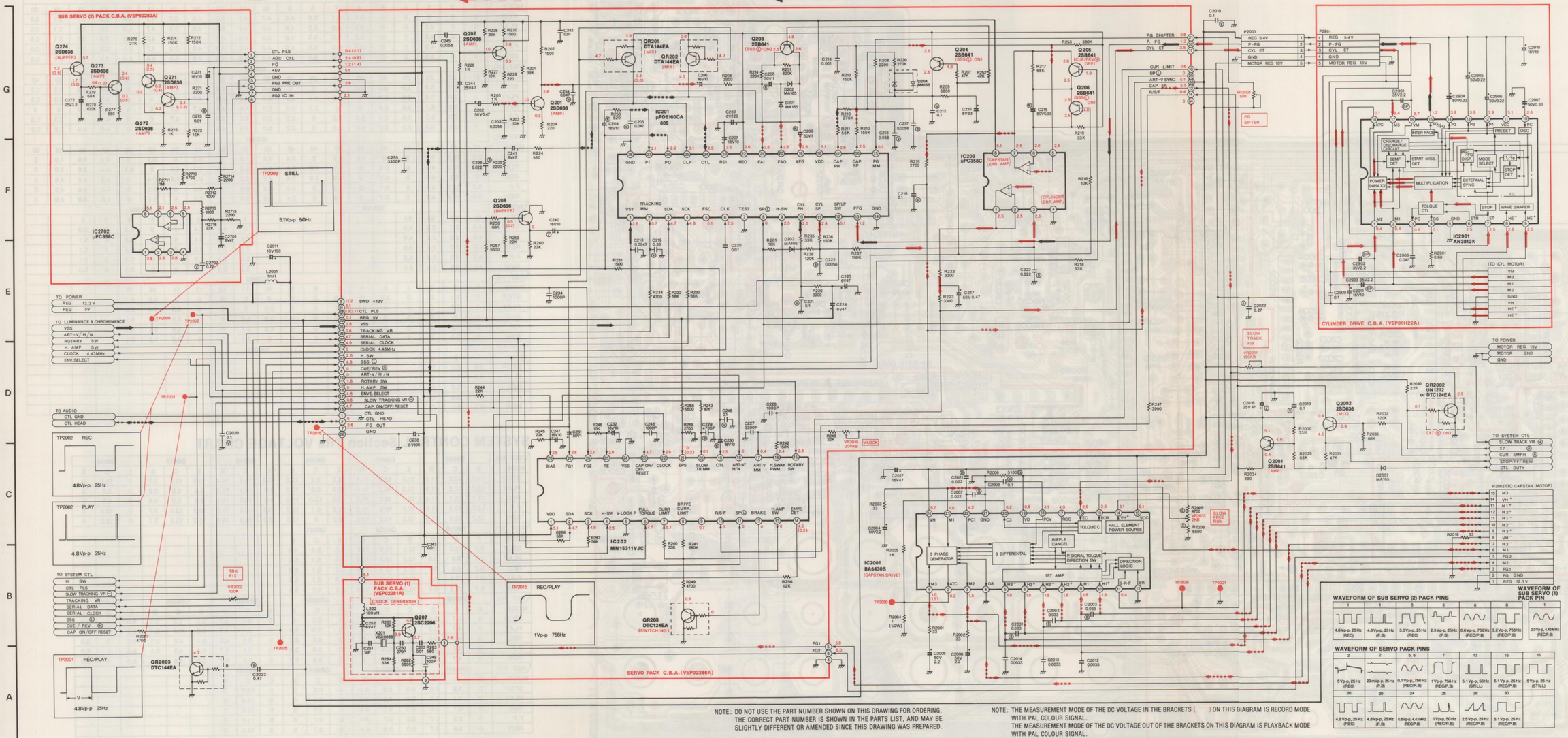

NOTE: DO NOT USE THE PART NUMBER SHOWN ON THIS DRAWING FOR ORDERING. THE CORRECT PART NUMBER IS SHOWN IN THE PARTS LIST, AND MAY BE SLIGHTLY DIFFERENT OR AMENDED SINCE THIS DRAWING WAS PREPARED.

NOTE: THE MEASUREMENT MODE OF THE DC VOLTAGE IN THE BRACKETS ( ) ON THIS DIAGRAM IS RECORD MODE WITH PAL COLOUR SIGNAL.
THE MEASUREMENT MODE OF THE DC VOLTAGE OUT OF THE BRACKETS ON THIS DIAGRAM IS PLAYBACK MODE WITH PAL COLOUR SIGNAL.

WAVEFORM OF SUB SERVO (2) PACK PINS

1	2	3	6	8	1
4.8Vp-p, 25Hz (REC)	4.8Vp-p, 25Hz (P.B)	3.3Vp-p, 25Hz (REC)	2.3Vp-p, 25Hz (P.B)	0.6Vp-p, 756Hz (REC/P.B)	3.2Vp-p, 756Hz (REC/P.B)	2.0Vp-p, 4.43MHz (REC/P.B)

WAVEFORM OF SUB SERVO (1) PACK PIN

WAVEFORM OF SERVO PACK PINS

2	2	5, 6	7	13	15	16
5Vp-p, 25Hz (REC)	20mVp-p, 25Hz (P.B)	0.1Vp-p, 756Hz (REC/P.B)	1Vp-p, 756Hz (REC/P.B)	5.1Vp-p, 50Hz (STILL)	5.1Vp-p, 25Hz (REC/P.B)	5Vp-p, 25Hz (STILL)
20	20	24	25	26	30	
4.8Vp-p, 25Hz (REC)	4.8Vp-p, 25Hz (P.B)	0.89p-p, 4.43MHz (REC/P.B)	1Vp-p, 50Hz (REC/P.B)	2.5Vp-p, 25Hz (REC/P.B)	5.1Vp-p, 25Hz (REC/P.B)	

SERVO SCHEMATIC	
Transistor	
Q201	G-6
Q202	G-5
Q203	G-8
Q204	G-10
Q205	G-11
Q206	G-11
Q207	B-5
Q208	F-5
Q271	G-2
Q272	G-2
Q273	G-1
Q274	G-1
Q2001	C-13
Q2002	D-14
Transistor & Resistor	
QR201	G-7
QR202	G-7
QR203	B-7
QR2002	D-15
QR2003	A-2
Integrated Circuit	
IC201	G-7
IC202	B-7
IC203	F-10
IC2001	B-9
IC2702	F-1
IC2901	E-15
Test Point	
TP2001	D-2
TP2002	E-2
TP2009	E-2
TP2015	D-3
TP2020	B-9
TP2021	B-12
TP2025	B-9
TP2026	B-12
Adjustment	
VR2001	G-13
VR2002	B-3
VR2010	C-9
VR2011	D-13
VR2013	C-12
Connector	
P2001	G-13
P2002	C-15
P2901	G-13

ADDRESS INFORMATION

3—8

www.freeservicemanuals.info

3-10. SERVO Section In Main C.B.A. (VEP03440A: NV-G21EG) (VEP03440C: NV-G21B) (VEP03440B: NV-G21EO/EV)

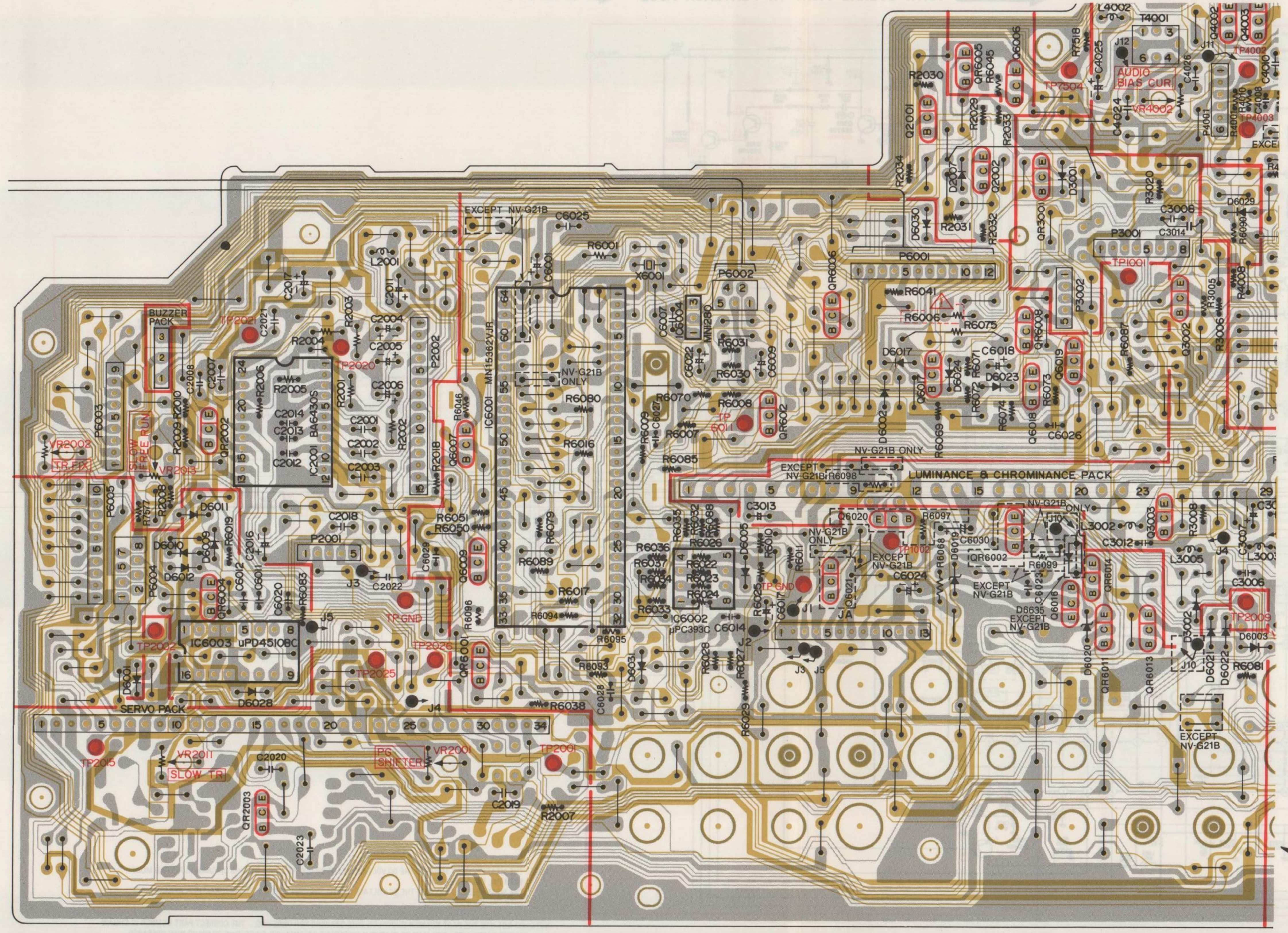

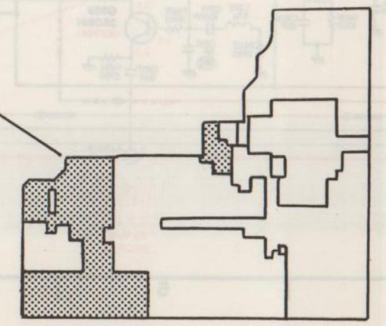

3-11. SERVO PACK C.B.A. (VEP02266A)

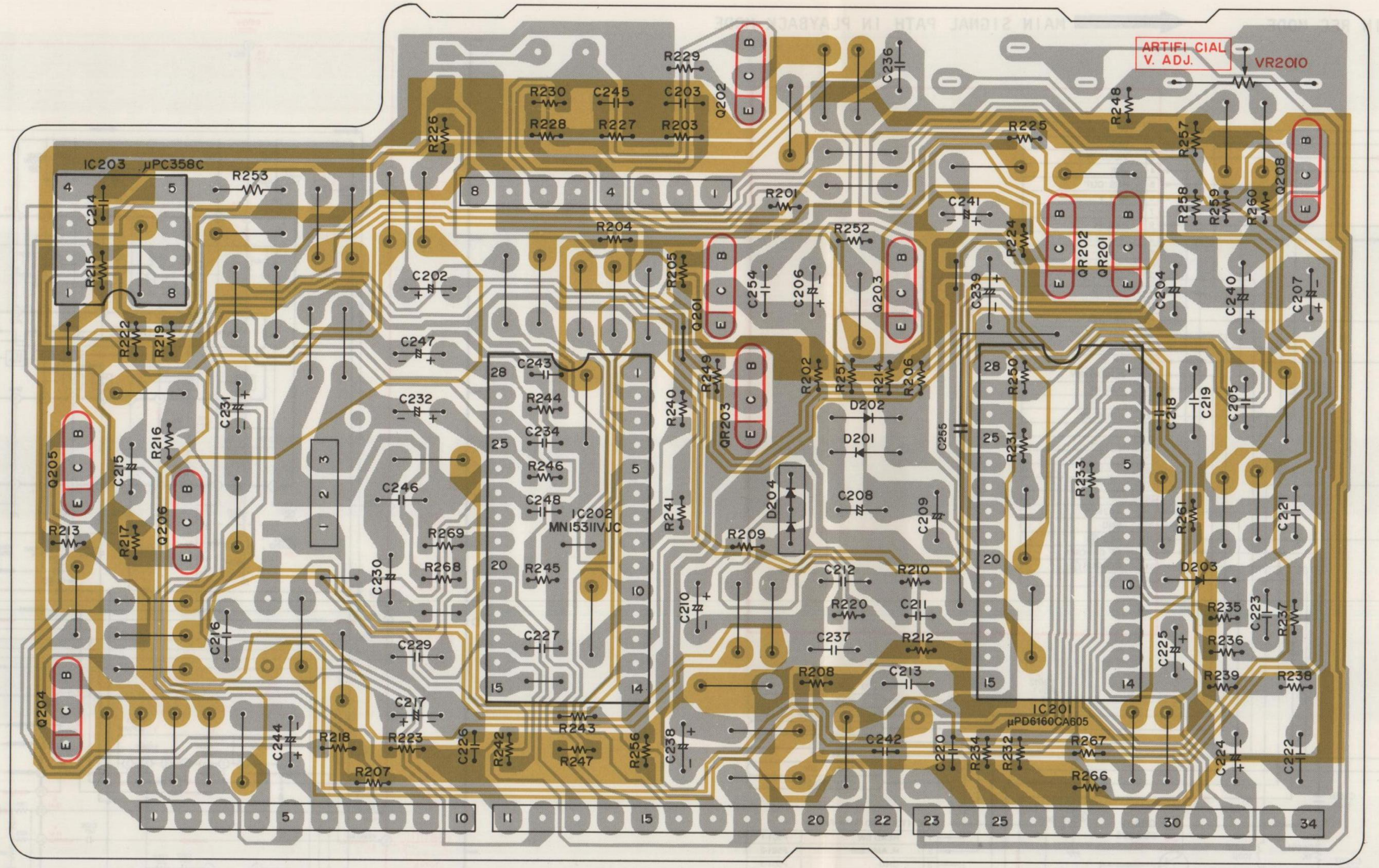

3-12. SUB SERVO (1) PACK C.B.A. (VEP02281A)

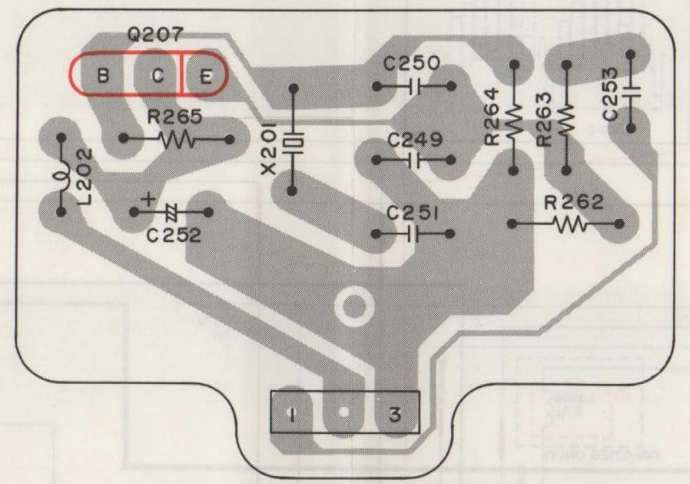

3-13. CYLINDER DRIVE C.B.A. (VEP00H22A)

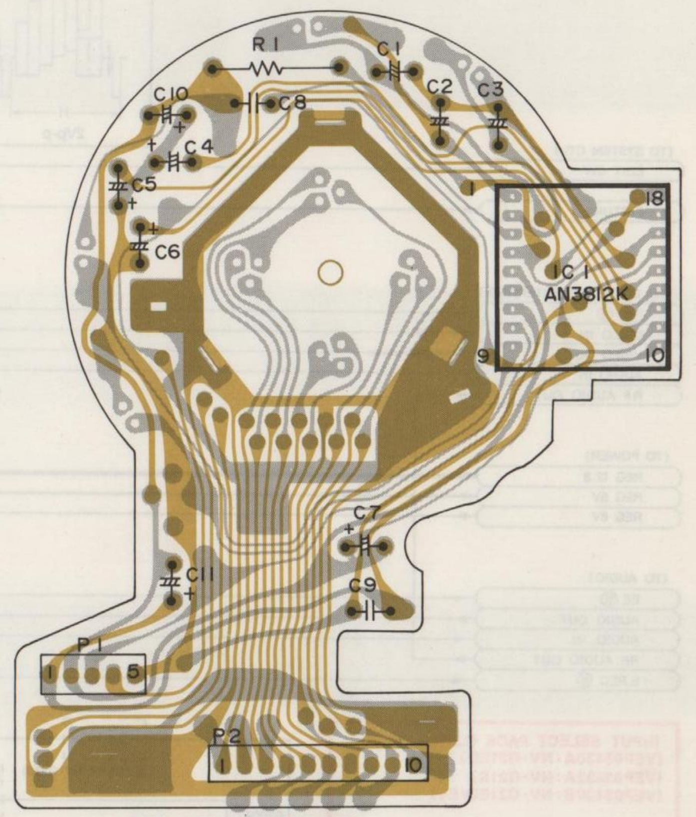

REF. NO. 2900 SERIES

3-14. SUB SERVO (2) PACK C.B.A. (VEP02282A)

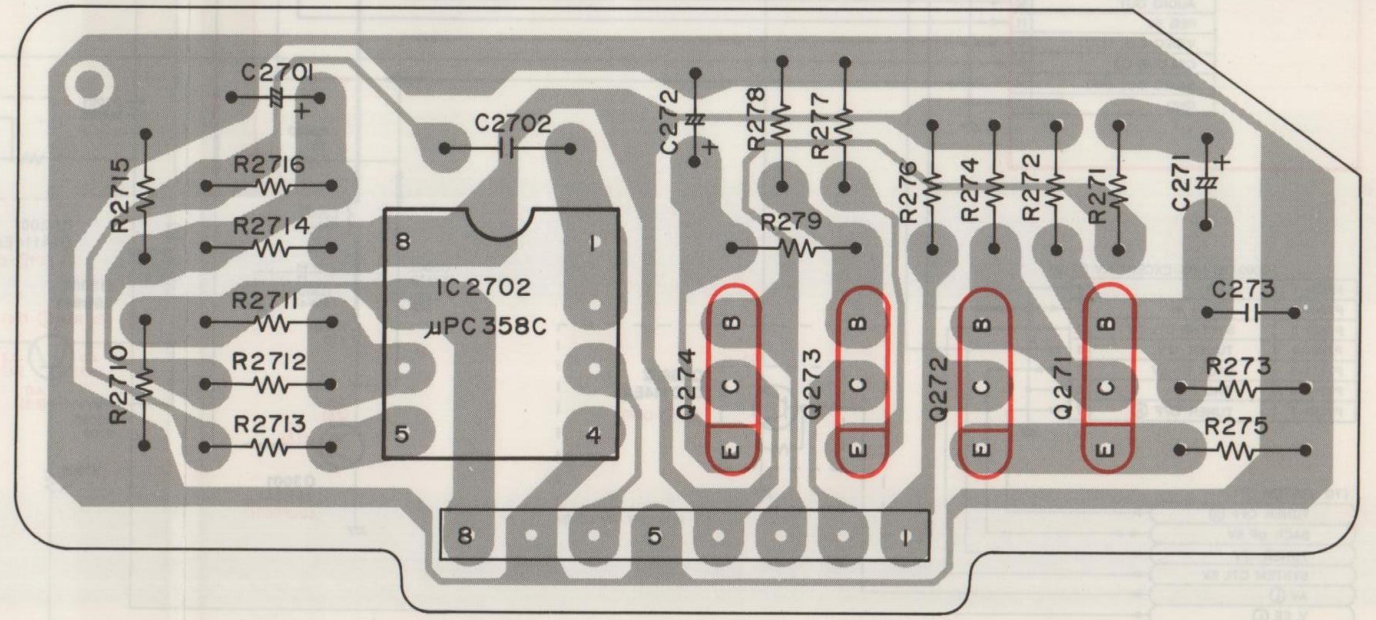

Next Page: LUMINANCE & CHROMINANCE Section

www.freeservicemanuals.info

3-15. LUMINANCE & CHROMINANCE SCHEMATIC DIAGRAM

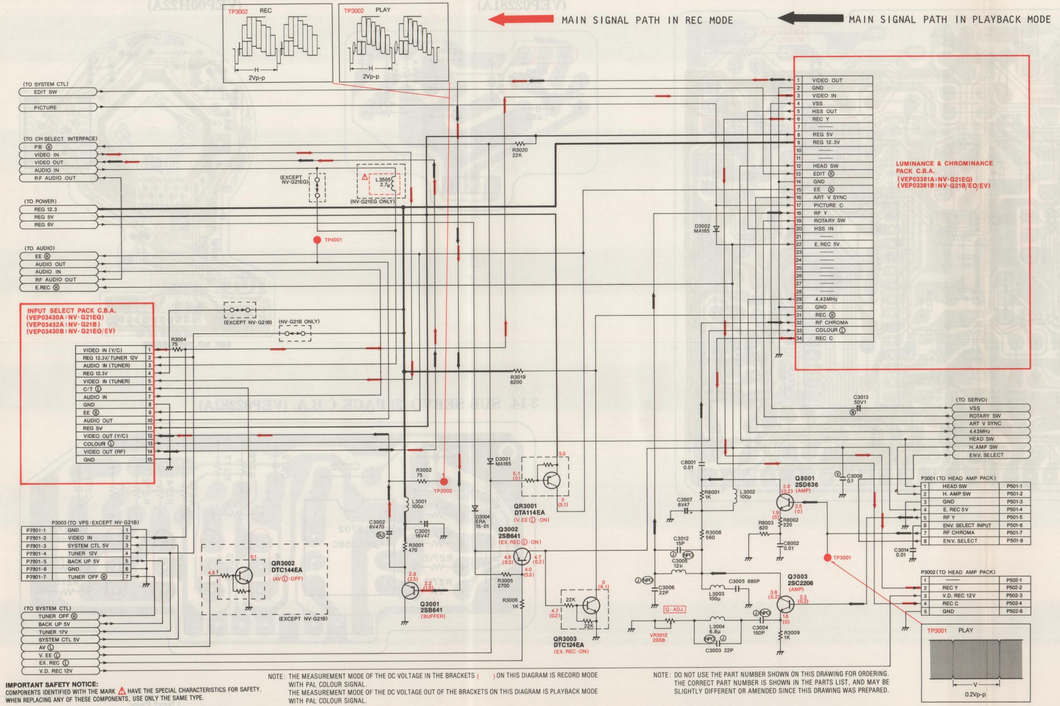

3-16. LUMINANCE & CHROMINANCE PACK SCHEMATIC DIAGRAM

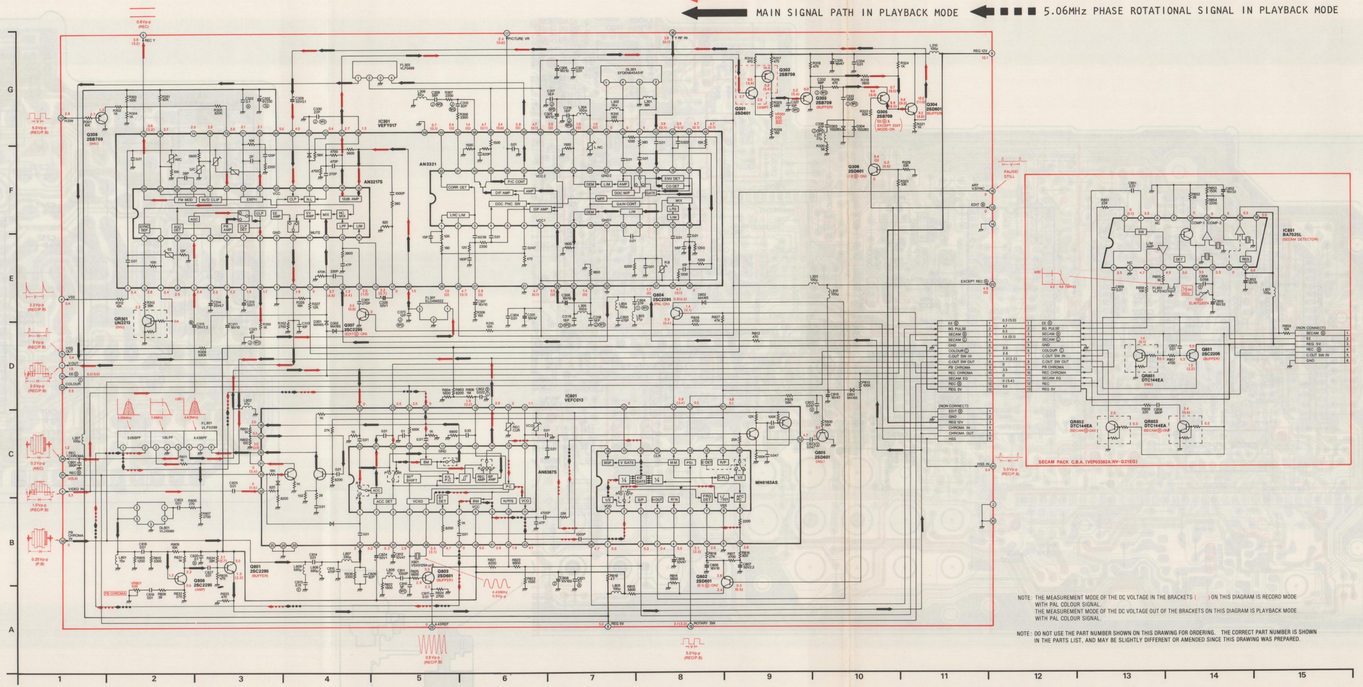

www.freeservicemanuals.info

LUMINANCE & CHROMINANCE PACK SCHEMATIC	
Transistor	
Q301	G-9
Q302	G-9
Q303	G-10
Q304	G-11
Q305	G-10
Q306	F-10
Q307	D-4
Q308	G-1
Q801	B-3
Q802	B-8
Q803	B-5
Q804	E-8
Q805	C-10
Q806	B-3
Q851	D-14
Transistor & Resistor	
QR301	E-2
QR851	D-13
QR852	C-13
QR853	C-13
Integrated Circuit	
IC301	G-5
IC801	D-7
IC851	E-15
Adjustment	
VR301	G-9
VR801	A-2
T851	E-14

ADDRESS INFORMATION

IC301 (VEFY017)

PIN NO.	WAVEFORM	PIN NO.	WAVEFORM
1	2.5Vp-p (RECP.B)	40	0.05V p-p (P.B)
3	0.8Vp-p (RECP.B)	41	0.25V p-p (P.B)
4	5.0Vp-p (RECP.B)	43	0.3V p-p (P.B)
5	1.0Vp-p (RECP.B)	48	0.2V p-p (P.B)
7	0.3Vp-p (P.B)	50	0.2V p-p (P.B)
10	2.2Vp-p (RECP.B)	64	0.2V p-p (RECP.B)
11	2.7V p-p (PAUSE/STILL)	65	0.3V p-p (RECP.B)
16	0.8V p-p (REC)	66	0.6V p-p (RECP.B)
16	0.6V p-p (P.B)	67	1.2V p-p (RECP.B)
18, 19	0.3Vp-p (P.B)	70	0.8V p-p (REC)
31	0.4V p-p (P.B)	71	0.3V p-p (REC)
39	0.1V p-p (P.B)	78	1.0V p-p (REC)

IC801 (VEFC013)

PIN NO.	WAVEFORM	PIN NO.	WAVEFORM
3	5.0V p-p (RECP.B)	32	1.0V p-p (RECP.B)
5	5.0V p-p (RECP.B)	34	0.3V p-p (P.B)
17	1.2V p-p (REC) 1.0V p-p (P.B)	38	0.35V p-p (RECP.B)
18	0.6V p-p (REC) 1.5V p-p (P.B)	39	0.7V p-p (RECP.B)
20	80mV p-p (REC) 1.0V p-p (P.B)	44	0.35V p-p (RECP.B)
22	0.6V p-p (REC) 0.5V p-p (P.B)	50	5V p-p (RECP.B)
23	0.15V p-p (REC) 0.6V p-p (P.B)	53	5.0V p-p (RECP.B)
24	150mV p-p (P.B)	54	5.0V p-p (REC)
30, 31	1.1V p-p (REC)	54	4.5V p-p (P.B)
30, 31	1.0V p-p (P.B)	56	5.0V p-p (RECP.B)

3-17. LUMINANCE & CHROMINANCE Section In Main C.B.A. (VEP03440A: NV-G21EG) (VEP03440C: NV-G21B) (VEP03440B: NV-G21EO/EV)

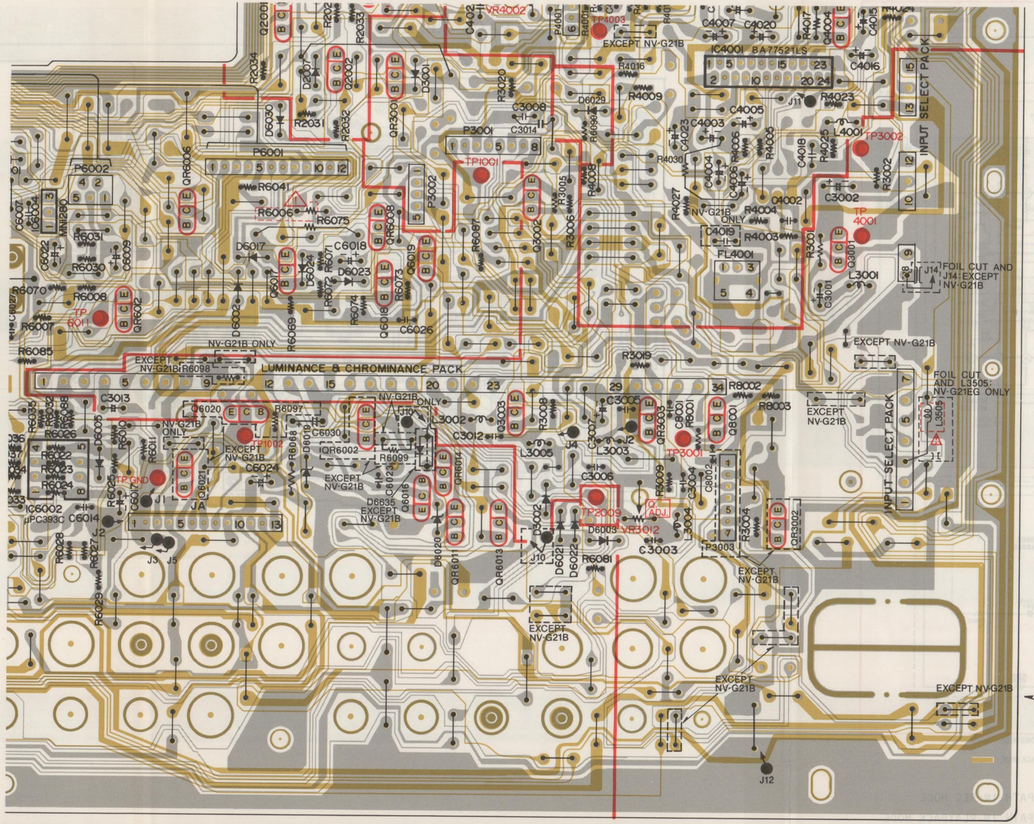

3-18. LUMINANCE & CHROMINANCE PACK C.B.A. (VEP03381A: NV-G21EG) (VEP03381B: NV-G21B/EO/EV)

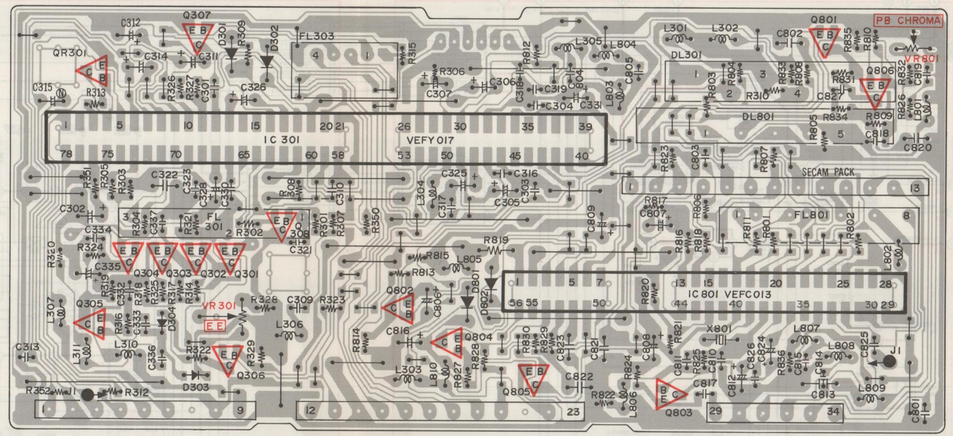

3-19. SECAM PACK C.B.A. (VEP03382A: NV-G21EG)

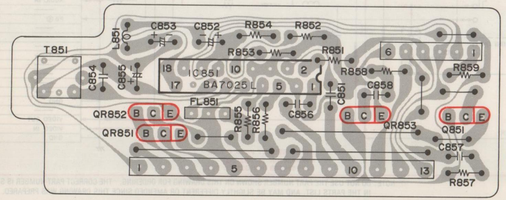

www.freeservicemanuals.info

3-20. INPUT SELECT PACK & SUB INPUT SELECT PACK SCHEMATIC DIAGRAM (NV-G21EG/EO/EV)

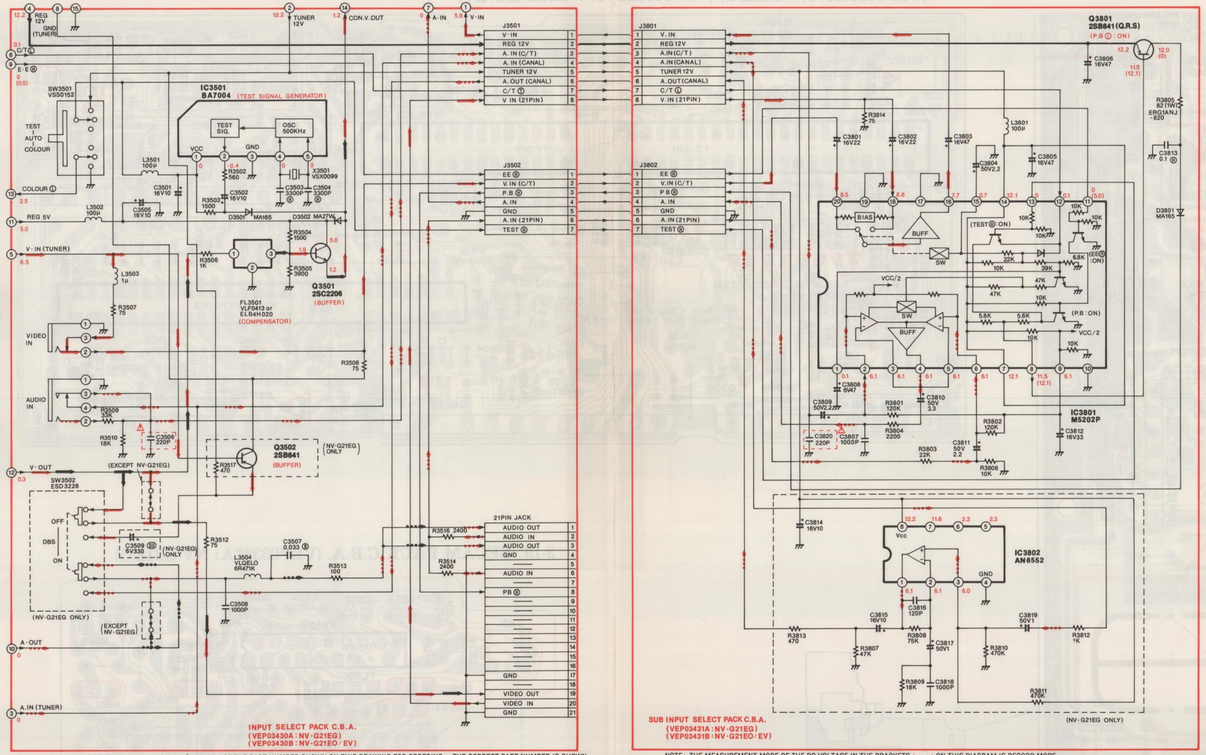

NOTE: DO NOT USE THE PART NUMBER SHOWN ON THIS DRAWING FOR ORDERING. THE CORRECT PART NUMBER IS SHOWN IN THE PARTS LIST, AND MAY BE SLIGHTLY DIFFERENT OR AMENDED SINCE THIS DRAWING WAS PREPARED.

IMPORTANT SAFETY NOTICE:
COMPONENTS IDENTIFIED WITH THE MARK ⚠ HAVE THE SPECIAL CHARACTERISTICS FOR SAFETY.
WHEN REPLACING ANY OF THESE COMPONENTS, USE ONLY THE SAME TYPE.

NOTE: THE MEASUREMENT MODE OF THE DC VOLTAGE IN THE BRACKETS ( ) ON THIS DIAGRAM IS RECORD MODE WITH PAL COLOUR SIGNAL.
THE MEASUREMENT MODE OF THE DC VOLTAGE OUT OF THE BRACKETS ON THIS DIAGRAM IS PLAYBACK MODE WITH PAL COLOUR SIGNAL.

VIDEO MAIN SIGNAL PATH IN REC MODE
VIDEO MAIN SIGNAL PATH IN PLAYBACK MODE
AUDIO MAIN SIGNAL PATH IN REC MODE
AUDIO MAIN SIGNAL PATH IN PLAYBACK MODE

Back Page:
LUMINANCE & CHROMINANCE Section

3-21. INPUT SELECT PACK C.B.A. (VEP03430A: NV-G21EG) (VEP03430B: NV-G21EO/EV) & SUB INPUT SELECT PACK C.B.A. (VEP03431A: NV-G21EG) (VEP03431B: NV-G21EO/EV)

INPUT SELECT PACK C.B.A.
(VEP03430A: NV-G21EG)
(VEP03430B: NV-G21EO/EV)

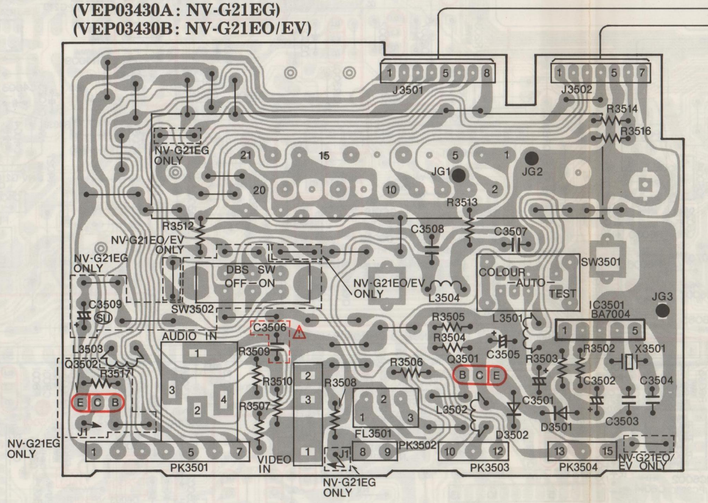

SUB INPUT SELECT PACK C.B.A.
(VEP03431A: NV-G21EG)
(VEP03431B: NV-G21EO/EV)

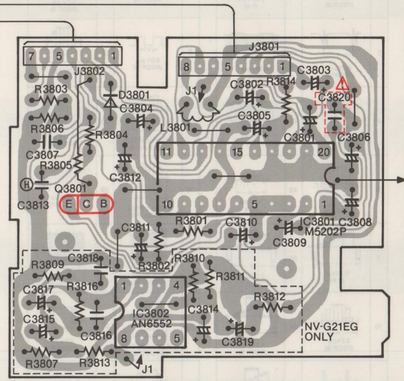

www.freeservicemanuals.info

3-22. INPUT SELECT PACK SCHEMATIC DIAGRAM (NV-G21B)

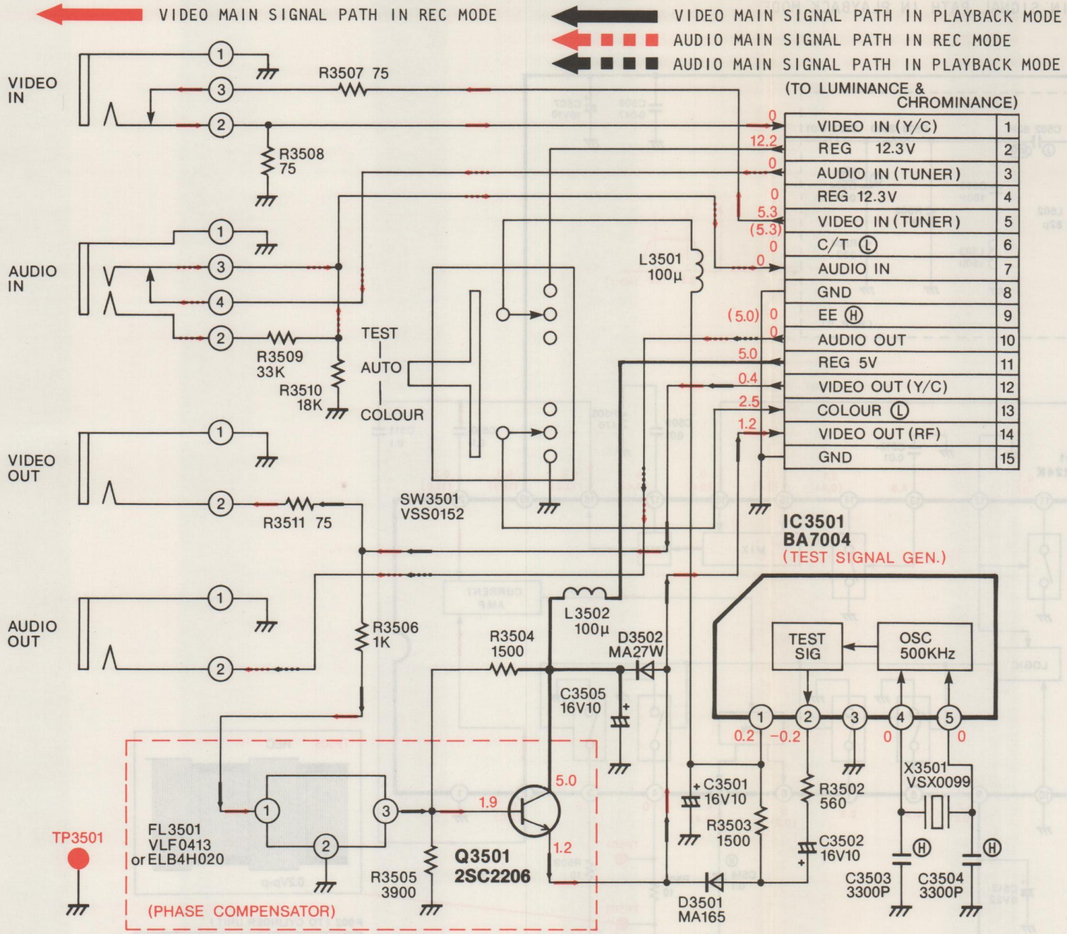

NOTE: DO NOT USE THE PART NUMBER SHOWN ON THIS DRAWING FOR ORDERING. THE CORRECT PART NUMBER IS SHOWN IN THE PARTS LIST, AND MAY BE SLIGHTLY DIFFERENT OR AMENDED SINCE THIS DRAWING WAS PREPARED.

NOTE: THE MEASUREMENT MODE OF THE DC VOLTAGE IN THE BRACKETS ( ) ON THIS DIAGRAM IS RECORD MODE WITH PAL COLOUR SIGNAL.
THE MEASUREMENT MODE OF THE DC VOLTAGE OUT OF THE BRACKETS ON THIS DIAGRAM IS PLAYBACK MODE WITH PAL COLOUR SIGNAL.

3-23. INPUT SELECT PACK C.B.A. (VEP03432A: NV-G21B)

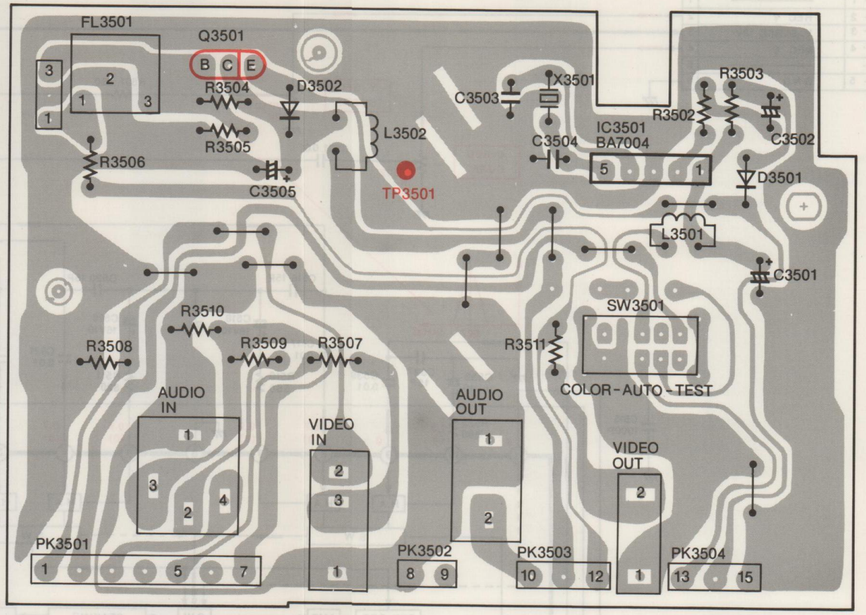

Next Page:
HEAD AMP PACK Section

www.freeservicemanuals.info

3-24. HEAD AMP PACK SCHEMATIC DIAGRAM

MAIN SIGNAL PATH IN REC MODE

MAIN SIGNAL PATH IN PLAYBACK MODE

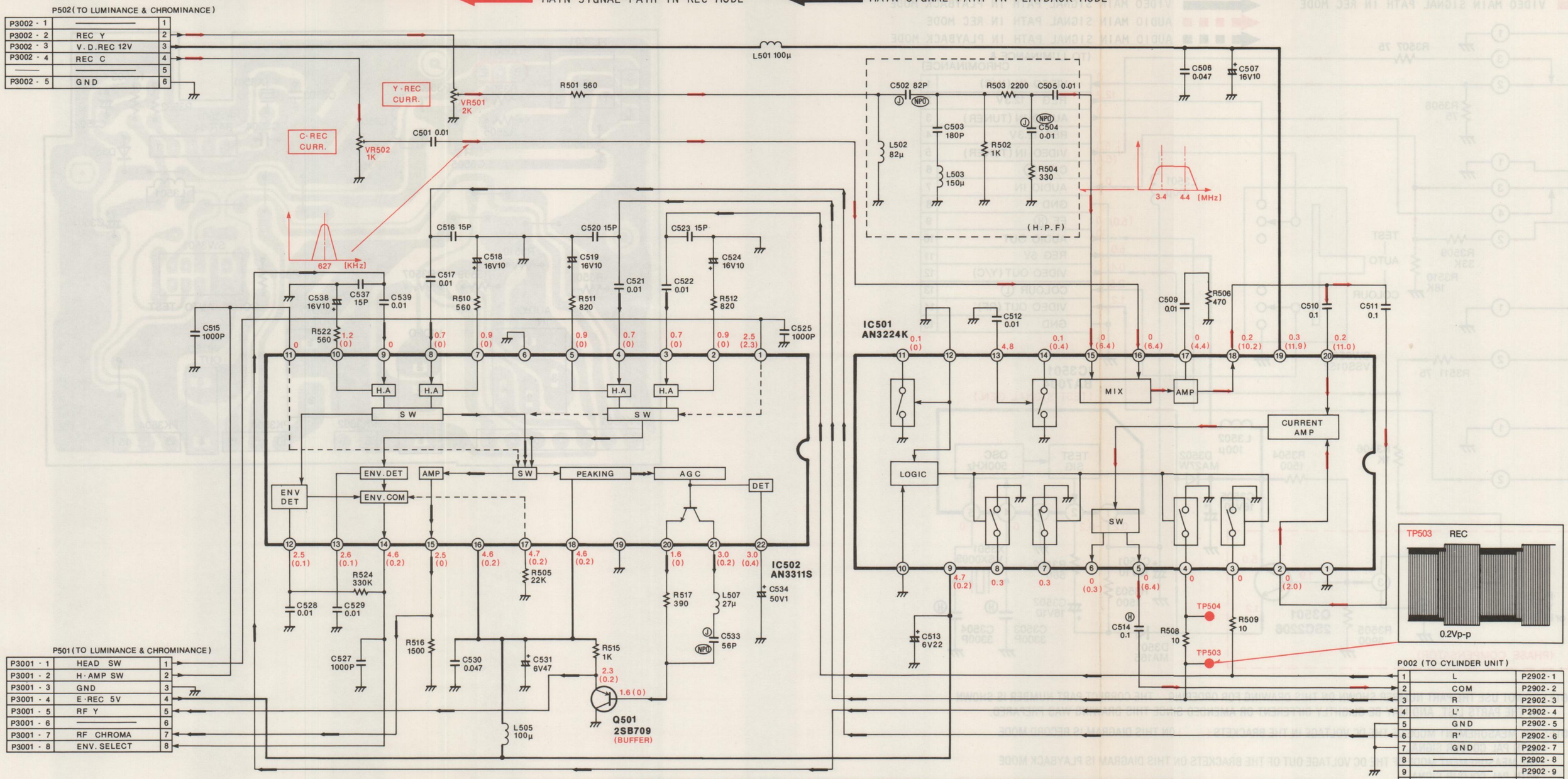

NOTE: DO NOT USE THE PART NUMBER SHOWN ON THIS DRAWING FOR ORDERING. THE CORRECT PART NUMBER IS SHOWN IN THE PARTS LIST, AND MAY BE SLIGHTLY DIFFERENT OR AMENDED SINCE THIS DRAWING WAS PREPARED.

NOTE: THE MEASUREMENT MODE OF THE DC VOLTAGE IN THE BRACKETS ( ) ON THIS DIAGRAM IS RECORD MODE WITH PAL COLOUR SIGNAL.
THE MEASUREMENT MODE OF THE DC VOLTAGE OUT OF THE BRACKETS ON THIS DIAGRAM IS PLAYBACK MODE WITH PAL COLOUR SIGNAL.

3—14

www.freeservicemanuals.info

3-25. HEAD AMP PACK C.B.A. (VEP05097E)

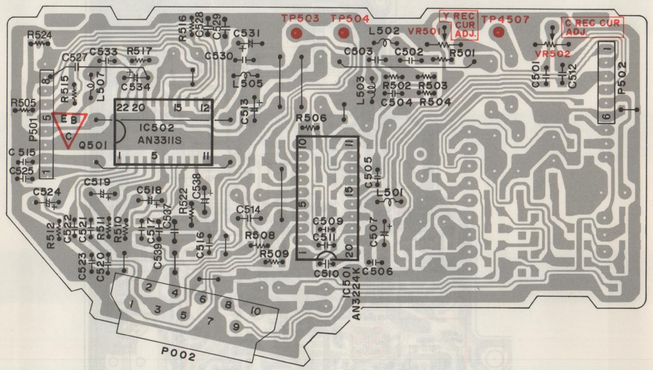

3-26. AUDIO SCHEMATIC DIAGRAM

MAIN SIGNAL PATH IN REC MODE

MAIN SIGNAL PATH IN PLAYBACK MODE

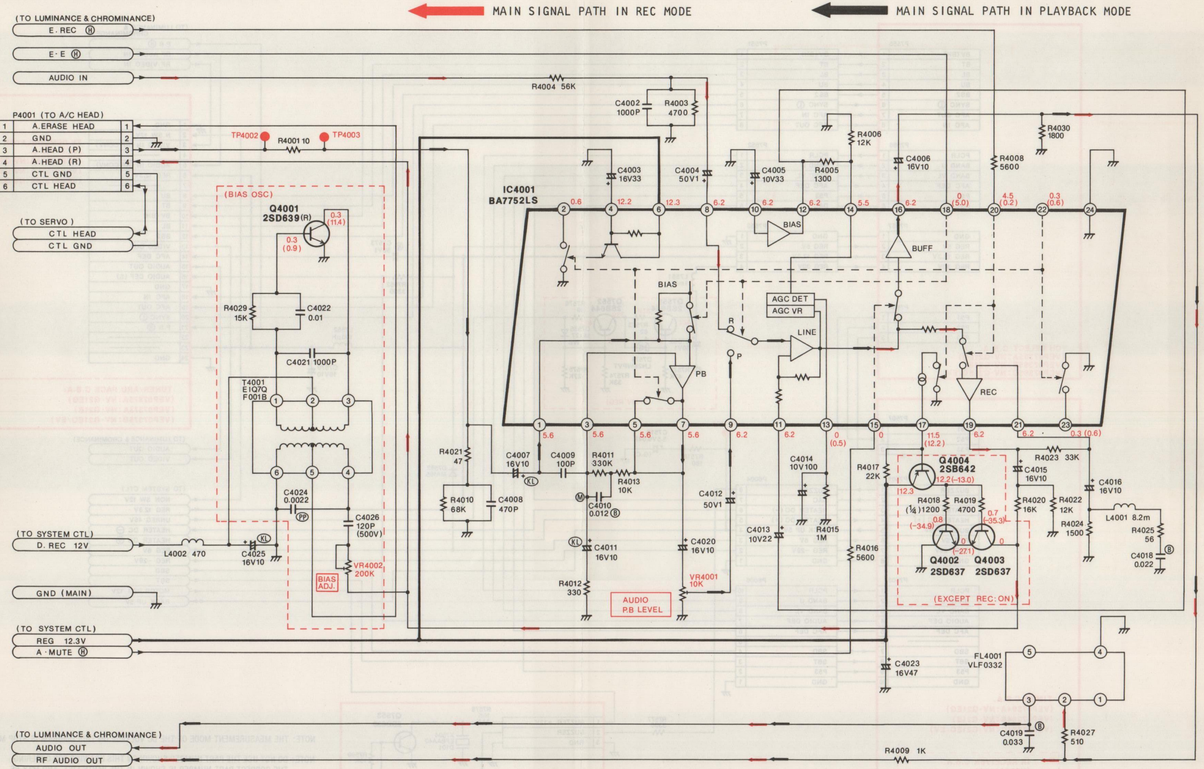

NOTE: THE MEASUREMENT MODE OF THE DC VOLTAGE IN THE BRACKETS ( ) ON THIS DIAGRAM IS RECORD MODE WITH 1kHz, 0dB SINE WAVE SIGNAL.
THE MEASUREMENT MODE OF THE DC VOLTAGE OUT OF THE BRACKETS ON THIS DIAGRAM IS PLAYBACK MODE WITH 1kHz, 0dB SINE WAVE SIGNAL.

NOTE: DO NOT USE THE PART NUMBER SHOWN ON THIS DRAWING FOR ORDERING. THE CORRECT PART NUMBER IS SHOWN IN THE PARTS LIST, AND MAY BE SLIGHTLY DIFFERENT OR AMENDED SINCE THIS DRAWING WAS PREPARED.

3-27. AUDIO Section In Main C.B.A. (VEP03440A: NV-G21EG) (VEP03440C: NV-G21B) (VEP03440B: NV-G21EO/EV)

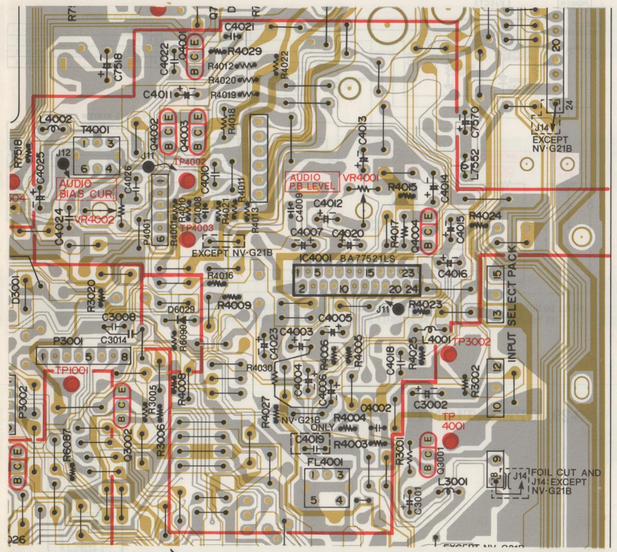

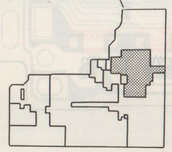

www.freeservicemanuals.info

3-28. OPERATION SCHEMATIC DIAGRAM

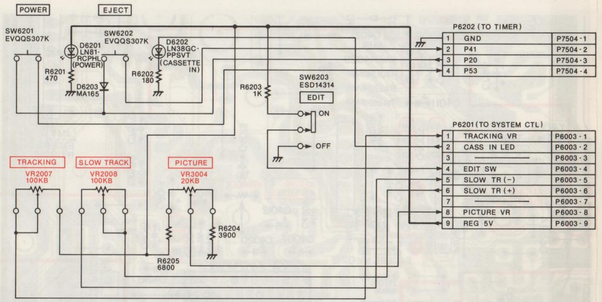

NOTE: DO NOT USE THE PART NUMBER SHOWN ON THIS DRAWING FOR ORDERING. THE CORRECT PART NUMBER IS SHOWN IN THE PARTS LIST, AND MAY BE SLIGHTLY DIFFERENT OR AMENDED SINCE THIS DRAWING WAS PREPARED.

3-29. OPERATION C.B.A. (VEP06409A)

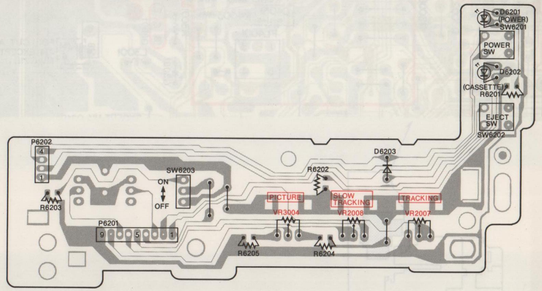

Back Page:
AUDIO Section

3-30. CH SELECT INTERFACE SCHEMATIC DIAGRAM

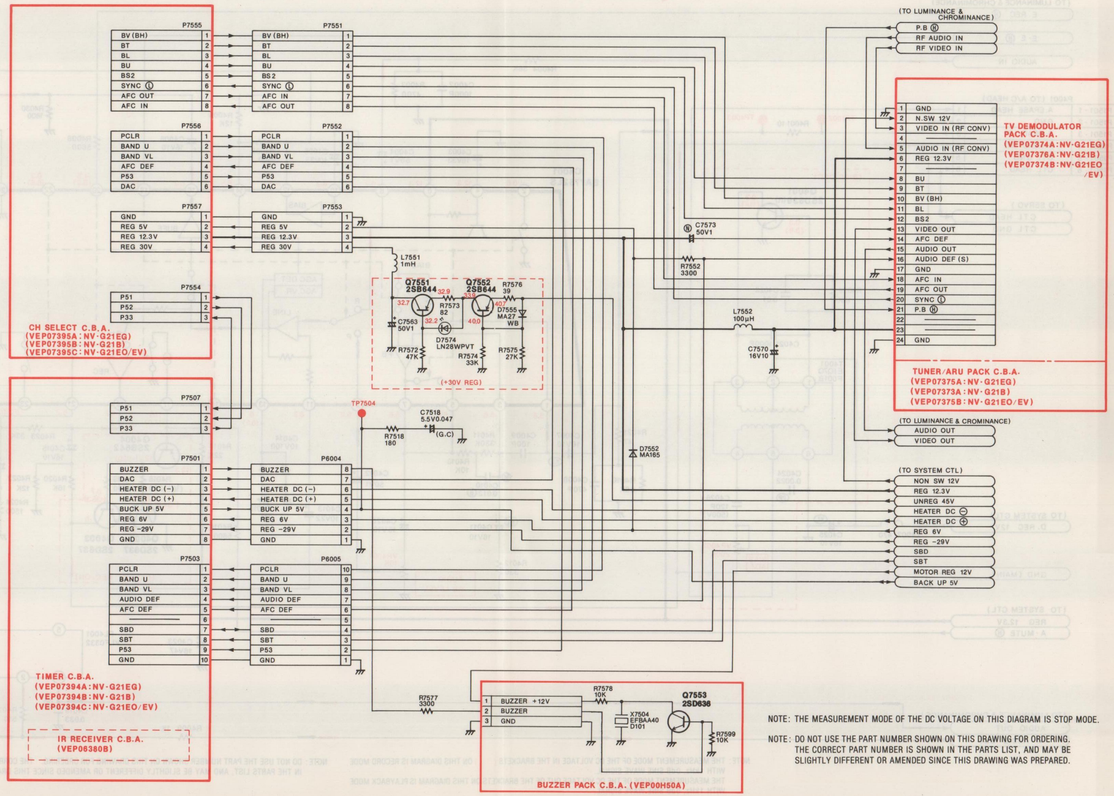

NOTE: THE MEASUREMENT MODE OF THE DC VOLTAGE ON THIS DIAGRAM IS STOP MODE.

NOTE: DO NOT USE THE PART NUMBER SHOWN ON THIS DRAWING FOR ORDERING. THE CORRECT PART NUMBER IS SHOWN IN THE PARTS LIST, AND MAY BE SLIGHTLY DIFFERENT OR AMENDED SINCE THIS DRAWING WAS PREPARED.

3-31. CH SELECT INTERFACE Section In Main C.B.A. (VEP03440A: NV-G21EG) (VEP03440C: NV-G21B) (VEP03440B: NV-G21EO/EV)

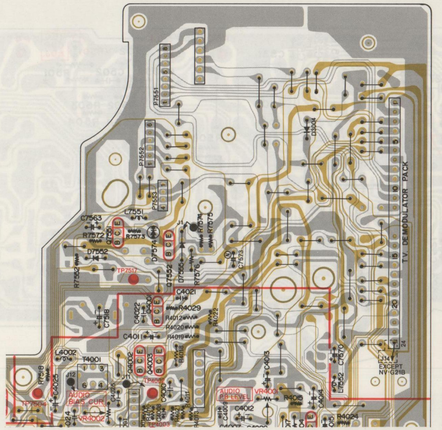

3-32. BUZZER PACK C.B.A. (VEP00H50A)

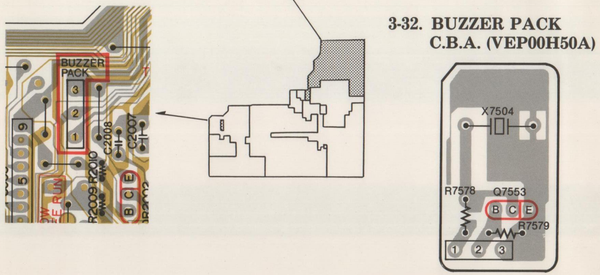

www.freeservicemanuals.info

3-33. CH SELECT SCHEMATIC DIAGRAM (NV-G21EG)

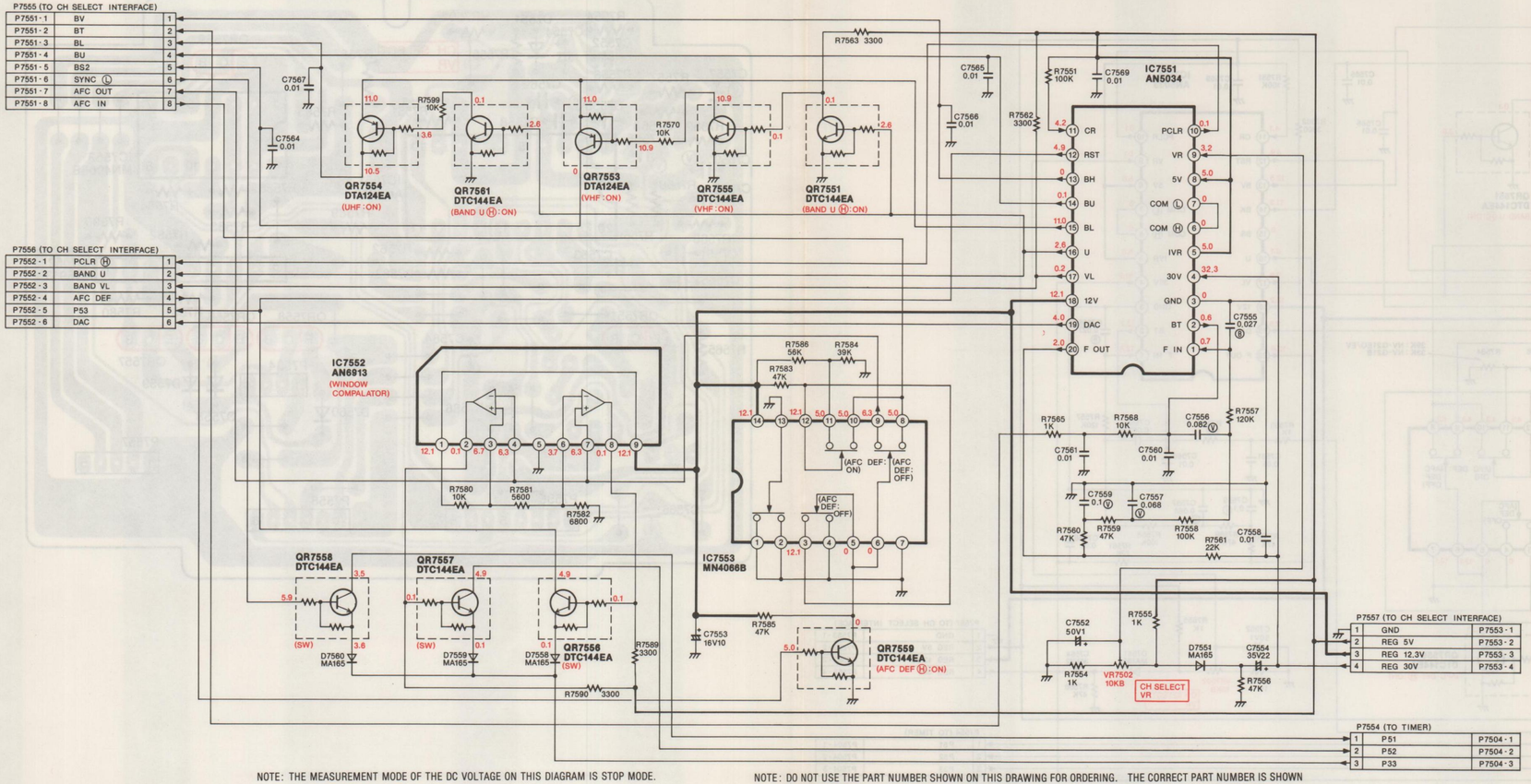

NOTE: THE MEASUREMENT MODE OF THE DC VOLTAGE ON THIS DIAGRAM IS STOP MODE.

NOTE: DO NOT USE THE PART NUMBER SHOWN ON THIS DRAWING FOR ORDERING. THE CORRECT PART NUMBER IS SHOWN IN THE PARTS LIST, AND MAY BE SLIGHTLY DIFFERENT OR AMENDED SINCE THIS DRAWING WAS PREPARED.

3-34. CH SELECT C.B.A. (VEP07395A: NV-G21EG)

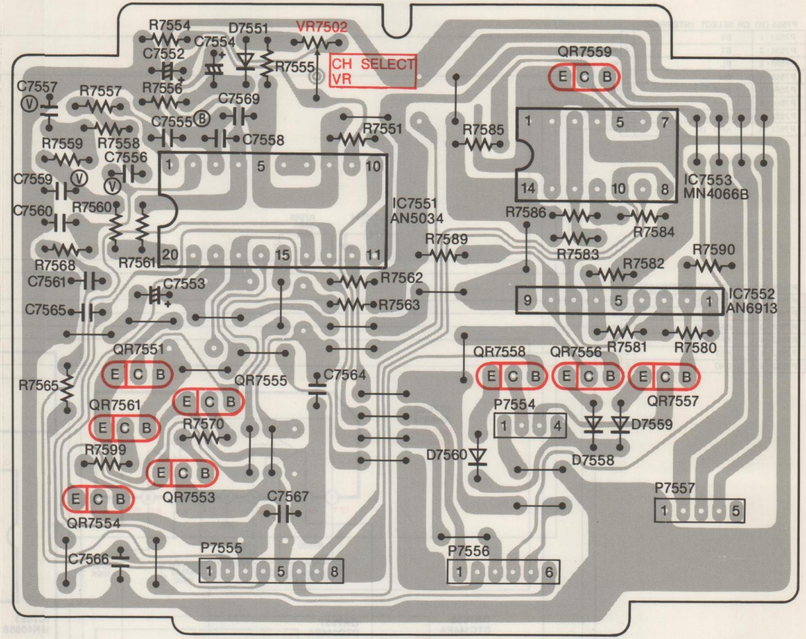

Next Page: CH SELECT Section

www.freeservicemanuals.info

3-35. CH SELECT SCHEMATIC DIAGRAM (NV-G21B/EO/EV)

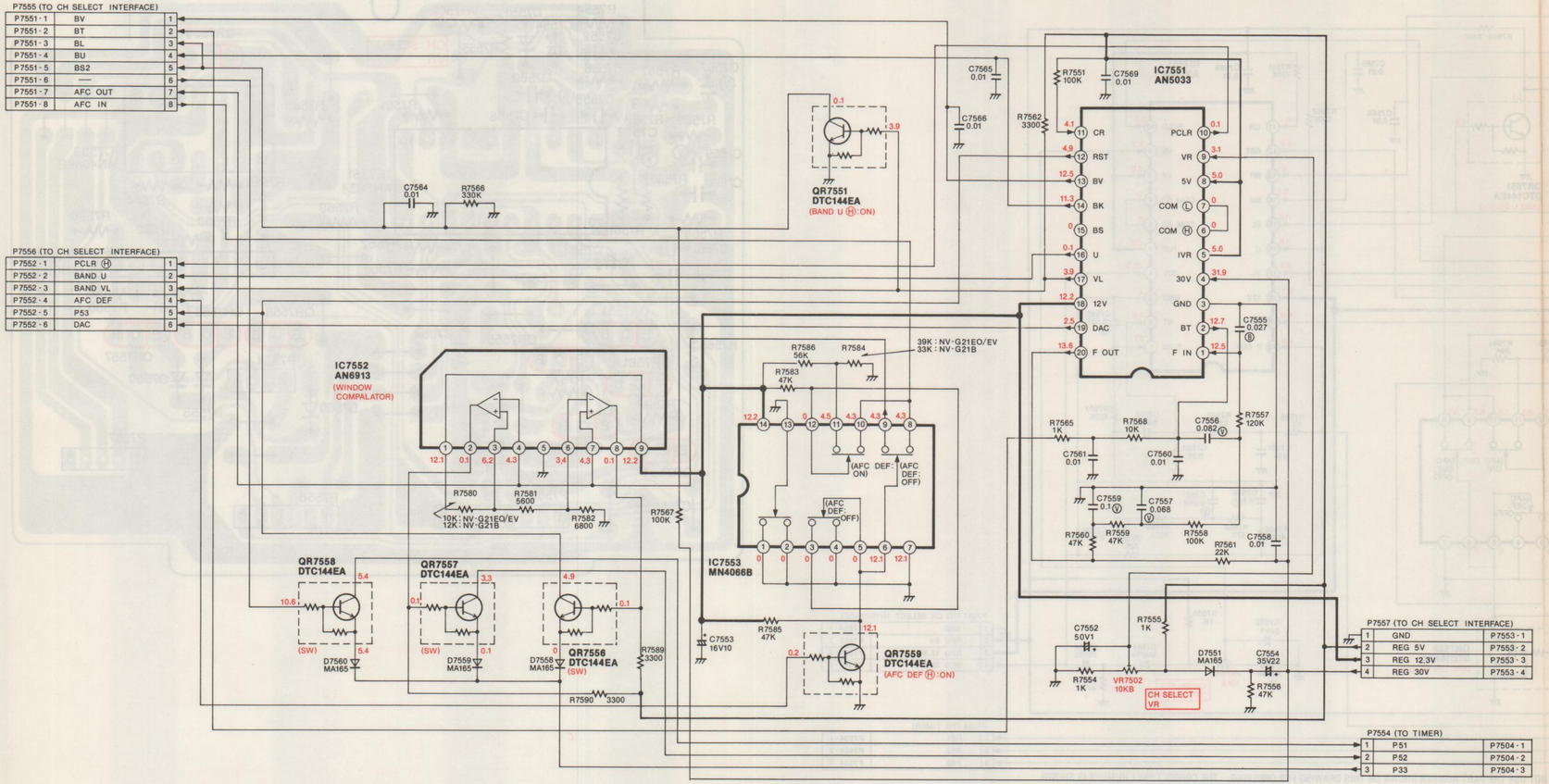

NOTE: THE MEASUREMENT MODE OF THE DC VOLTAGE ON THIS DIAGRAM IS STOP MODE.

NOTE: DO NOT USE THE PART NUMBER SHOWN ON THIS DRAWING FOR ORDERING. THE CORRECT PART NUMBER IS SHOWN IN THE PARTS LIST, AND MAY BE SLIGHTLY DIFFERENT OR AMENDED SINCE THIS DRAWING WAS PREPARED.

3-36. CH SELECT C.B.A. (VEP07395B: NV-G21B) (VEP07395C: NV-G21EO/EV)

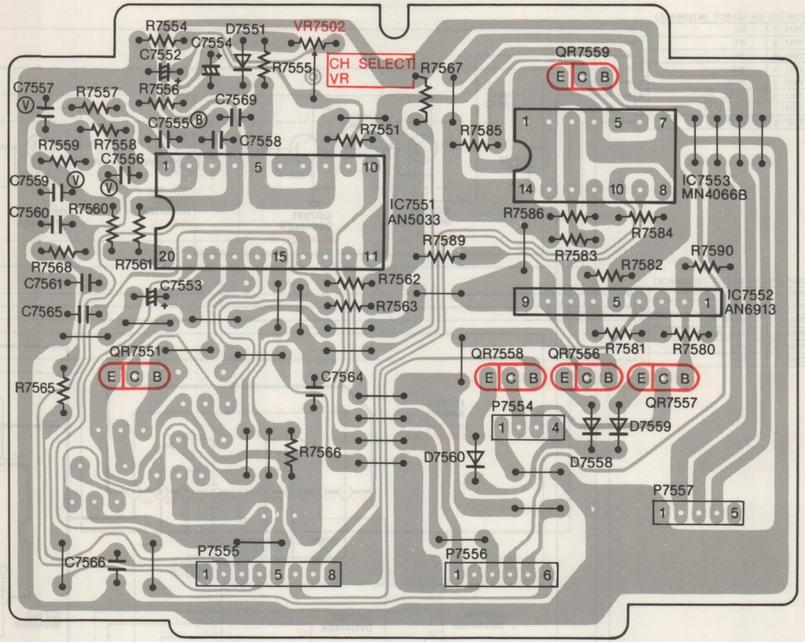

www.freeservicemanuals.info

3-37. TIMER C.B.A. (VEP07394A: NV-G21EG) (VEP07394B: NV-G21B) (VEP07394C: NV-G21EO/EV)

IR RECEIVER C.B.A. (VEP06380B)

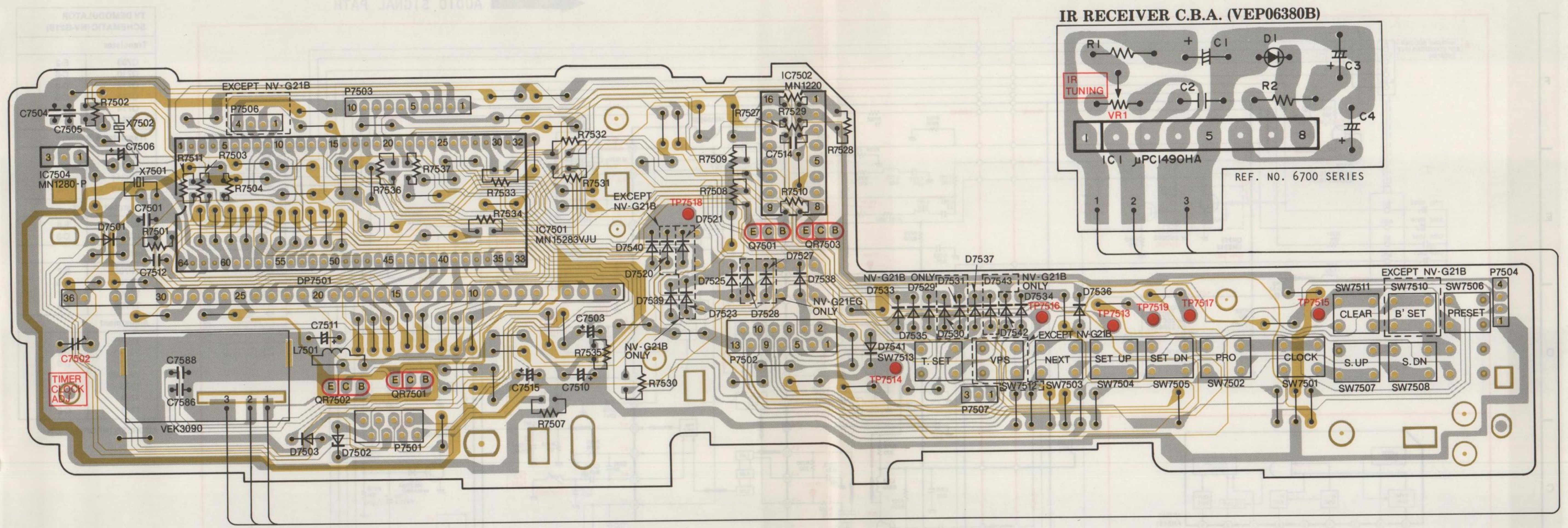

TIMER SCHEMATIC	
Transistor	
Q7501	A-11
Transistor & Resistor	
QR7501	F-8
QR7502	F-9
QR7503	B-11
Integrated Circuit	
IC6701	F-6
IC7501	G-12
IC7502	B-12
IC7504	E-8
Test Point	
TP7513	D-9
TP7514	D-9
TP7515	C-8
TP7516	C-8
TP7517	G-4
TP7518	D-6
Adjustment	
C7502	G-13
VR6701	F-6
Connector	
P7501	A-16
P7502	C-4
P7503	F-3
P7504	D-3
P7506	G-3
P7507	D-3

ADDRESS INFORMATION

3-38. TIMER SCHEMATIC DIAGRAM

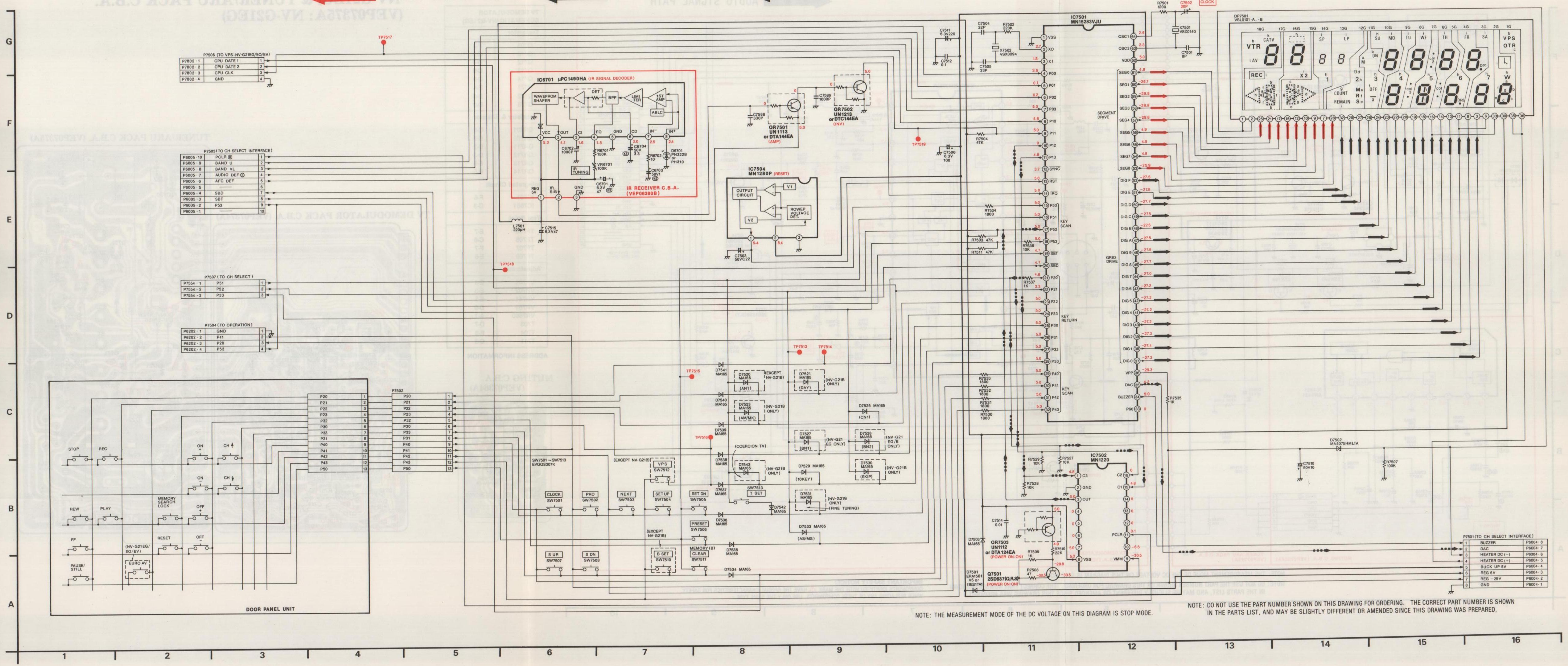

NOTE: THE MEASUREMENT MODE OF THE DC VOLTAGE ON THIS DIAGRAM IS STOP MODE.

NOTE: DO NOT USE THE PART NUMBER SHOWN ON THIS DRAWING FOR ORDERING. THE CORRECT PART NUMBER IS SHOWN IN THE PARTS LIST, AND MAY BE SLIGHTLY DIFFERENT OR AMENDED SINCE THIS DRAWING WAS PREPARED.

Next Page:
TV DEMODULATOR Section

www.freeservicemanuals.info

3-39. TV DEMODULATOR PACK & TUNER/ARU PACK SCHEMATIC DIAGRAM (NV-G21EG)

VIDEO SIGNAL PATH
AUDIO SIGNAL PATH

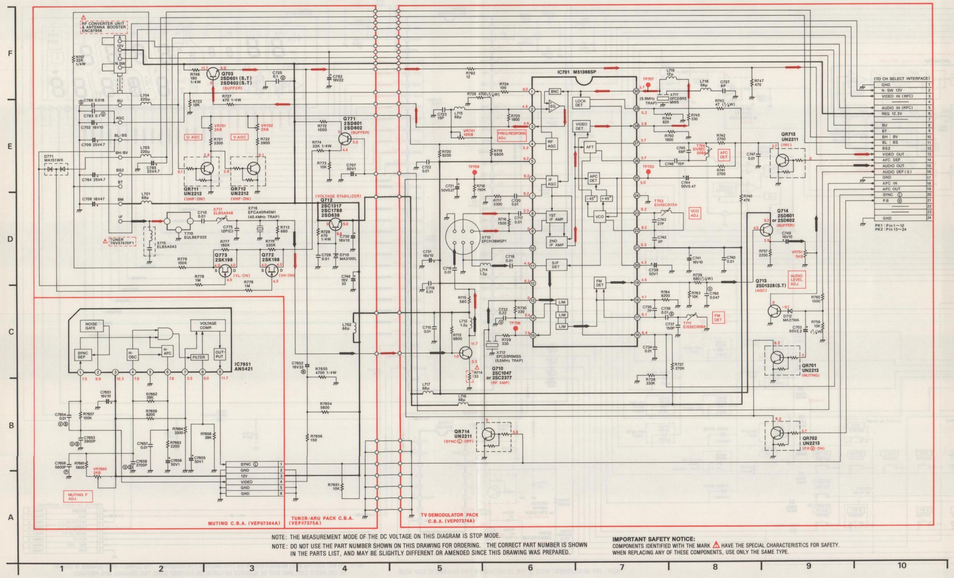

NOTE: THE MEASUREMENT MODE OF THIS DC VOLTAGE ON THIS DIAGRAM IS STOP MODE.
NOTE: DO NOT USE THE PART NUMBER SHOWN ON THIS DRAWING FOR ORDERING. THE CORRECT PART NUMBER IS SHOWN IN THE PARTS LIST, AND MAY BE SLIGHTLY DIFFERENT OR AMENDED SINCE THIS DRAWING WAS PREPARED.

IMPORTANT SAFETY NOTICE:
COMPONENTS IDENTIFIED WITH THE MARK ⚠ HAVE THE SPECIAL CHARACTERISTICS FOR SAFETY. WHEN REPLACING ANY OF THESE COMPONENTS, USE ONLY THE SAME TYPE.

3-40. TV DEMODULATOR PACK C.B.A. (VEP07374A: NV-G21EG) & TUNER/ARU PACK C.B.A. (VEP07375A: NV-G21EG)

TV DEMODULATOR SCHEMATIC (NV-G21EG)	
Transistor	
Q703	F-3
Q710	C-6
Q712	D-4
Q713	C-9
Q714	D-9
Q771	E-4
Q772	D-3
Q773	D-3
Transistor & Resistor	
QR701	C-9
QR702	B-9
QR711	D-2
QR712	D-3
QR713	E-9
QR714	B-5
Integrated Circuit	
IC701	F-6
IC7651	C-3
Test Point	
TP703	E-7
TP706	C-6
TP707	F-7
TP709	E-5
Adjustment	
VR701	E-3
VR702	E-3
VR741	E-5
VR751	D-9
VR7660	A-1
T703	D-7
T704	E-8
T711	C-8

ADDRESS INFORMATION

TV DEMODULATOR PACK C.B.A. (VEP07374A)

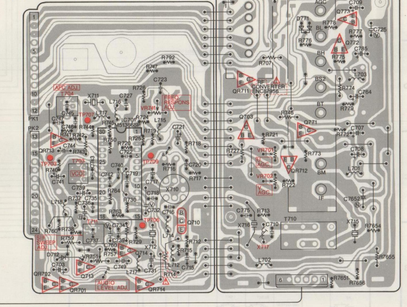

TUNER/ARU PACK C.B.A. (VEP07375A)

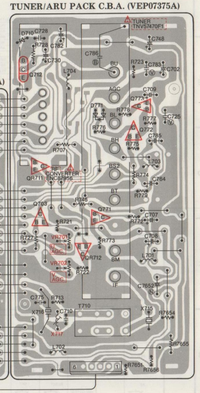

MUTING C.B.A. (VEP07364A)

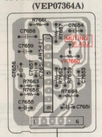

3-41. TV DEMODULATOR PACK & TUNER/ARU PACK SCHEMATIC DIAGRAM (NV-G21B)

VIDEO SIGNAL PATH
AUDIO SIGNAL PATH

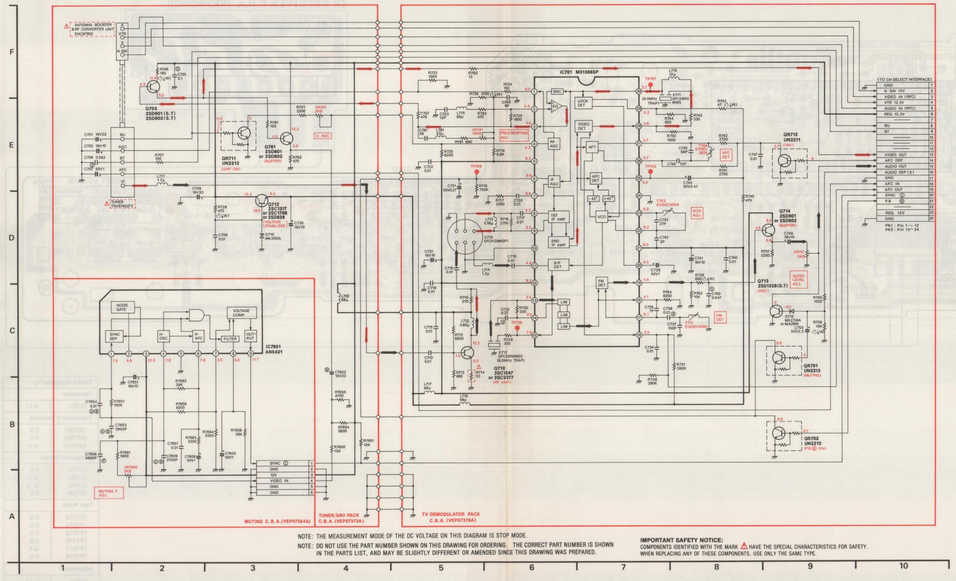

TV DEMODULATOR SCHEMATIC (NV-G21B)	
Transistor	
Q703	E-2
Q710	C-6
Q712	D-3
Q713	C-9
Q714	D-9
Q761	E-3
Transistor & Resistor	
QR701	C-9
QR702	B-9
QR711	E-3
QR713	E-9
Integrated Circuit	
IC701	F-6
IC7651	C-3
Test Point	
TP703	E-7
TP706	C-6
TP707	F-7
TP709	E-5
Adjustment	
VR701	E-4
VR741	E-5
VR751	D-9
VR7660	A-2
T703	D-7
T704	E-8
T711	C-8

ADDRESS INFORMATION

NOTE: THE MEASUREMENT MODE OF THE DC VOLTAGE ON THIS DIAGRAM IS STOP MODE.
NOTE: DO NOT USE THE PART NUMBER SHOWN ON THIS DRAWING FOR ORDERING. THE CORRECT PART NUMBER IS SHOWN IN THE PARTS LIST, AND MAY BE SLIGHTLY DIFFERENT OR AMENDED SINCE THIS DRAWING WAS PREPARED.

IMPORTANT SAFETY NOTICE:
COMPONENTS IDENTIFIED WITH THE MARK ⚠ HAVE THE SPECIAL CHARACTERISTICS FOR SAFETY. WHEN REPLACING ANY OF THESE COMPONENTS, USE ONLY THE SAME TYPE.

www.freeservicemanuals.info

3-42. TV DEMODULATOR PACK C.B.A. (VEP07376A : NV-G21B) & TUNER/ARU PACK C.B.A. (VEP07373A : NV-G21B)

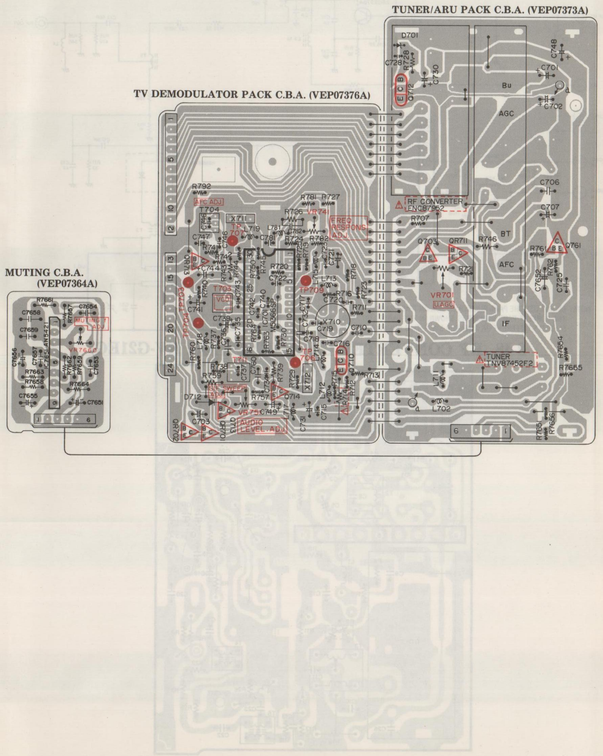

3-43. TV DEMODULATOR PACK & TUNER/ARU PACK SCHEMATIC DIAGRAM (NV-G21EO/EV)

VIDEO SIGNAL PATH　　AUDIO SIGNAL PATH

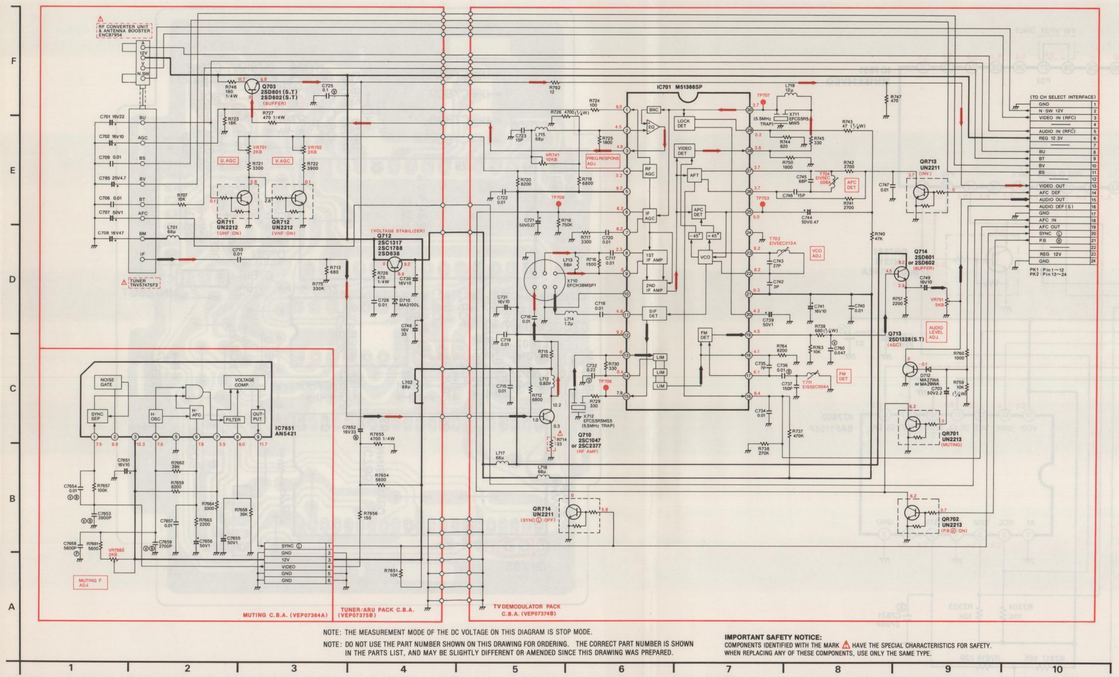

NOTE: THE MEASUREMENT MODE OF THE DC VOLTAGE ON THIS DIAGRAM IS STOP MODE.

NOTE: DO NOT USE THE PART NUMBER SHOWN ON THIS DRAWING FOR ORDERING. THE CORRECT PART NUMBER IS SHOWN IN THE PARTS LIST, AND MAY BE SLIGHTLY DIFFERENT OR AMENDED SINCE THIS DRAWING WAS PREPARED.

IMPORTANT SAFETY NOTICE:
COMPONENTS IDENTIFIED WITH THE MARK ⚠ HAVE THE SPECIAL CHARACTERISTICS FOR SAFETY. WHEN REPLACING ANY OF THESE COMPONENTS, USE ONLY THE SAME TYPE.

TV DEMODULATOR SCHEMATIC (NV-G21EO/EV)	
Transistor	
Q703	E-3
Q710	C-6
Q712	D-4
Q713	C-9
Q714	D-9
Transistor & Resistor	
QR701	C-9
QR702	B-9
QR711	E-2
QR712	E-3
QR713	E-9
Integrated Circuit	
IC701	F-6
IC7651	C-3
Test Point	
TP703	E-7
TP706	C-6
TP707	F-7
TP709	E-5
Adjustment	
VR701	E-2
VR702	E-3
VR741	E-5
VR751	D-9
VR7660	A-2
T703	D-7
T704	E-8
T711	C-8

ADDRESS INFORMATION

3-44. TV DEMODULATOR PACK C.B.A. (VEP07374B : NV-G21EO/EV) & TUNER/ARU PACK C.B.A. (VEP07375B : NV-G21EO/EV)

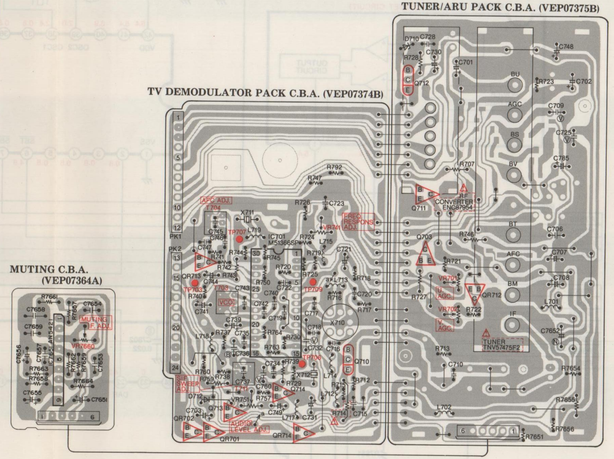

www.freeservicemanuals.info

3-45. VPS SCHEMATIC DIAGRAM (NV-G21EG/EV) (VW-VPS1/OPTION: NV-G21EO)

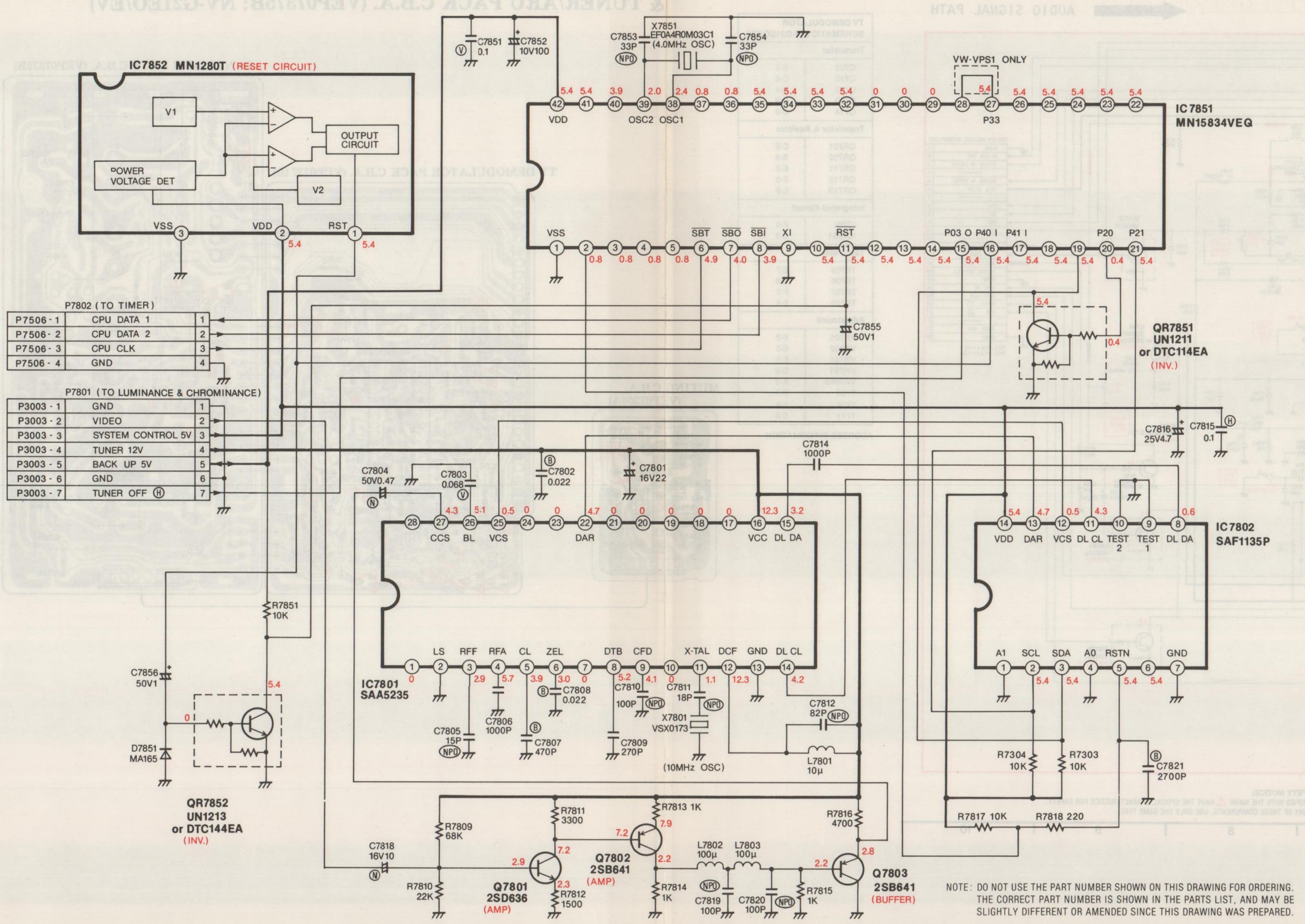

NOTE: THE MEASUREMENT MODE OF THE DC VOLTAGE IN THE BRACKETS ( ) ON THIS DIAGRAM IS RECORD MODE WITH PAL COLOUR SIGNAL. THE MEASUREMENT MODE OF THE DC VOLTAGE OUT OF THE BRACKETS ON THIS DIAGRAM IS PLAYBACK MODE WITH PAL COLOUR SIGNAL.

Back Page:
TV DEMODULATOR Section

3-46. VPS C.B.A. (VEP07368C: NV-G21EG/EV) (VW-VPS1/OPTION: NV-G21EO)

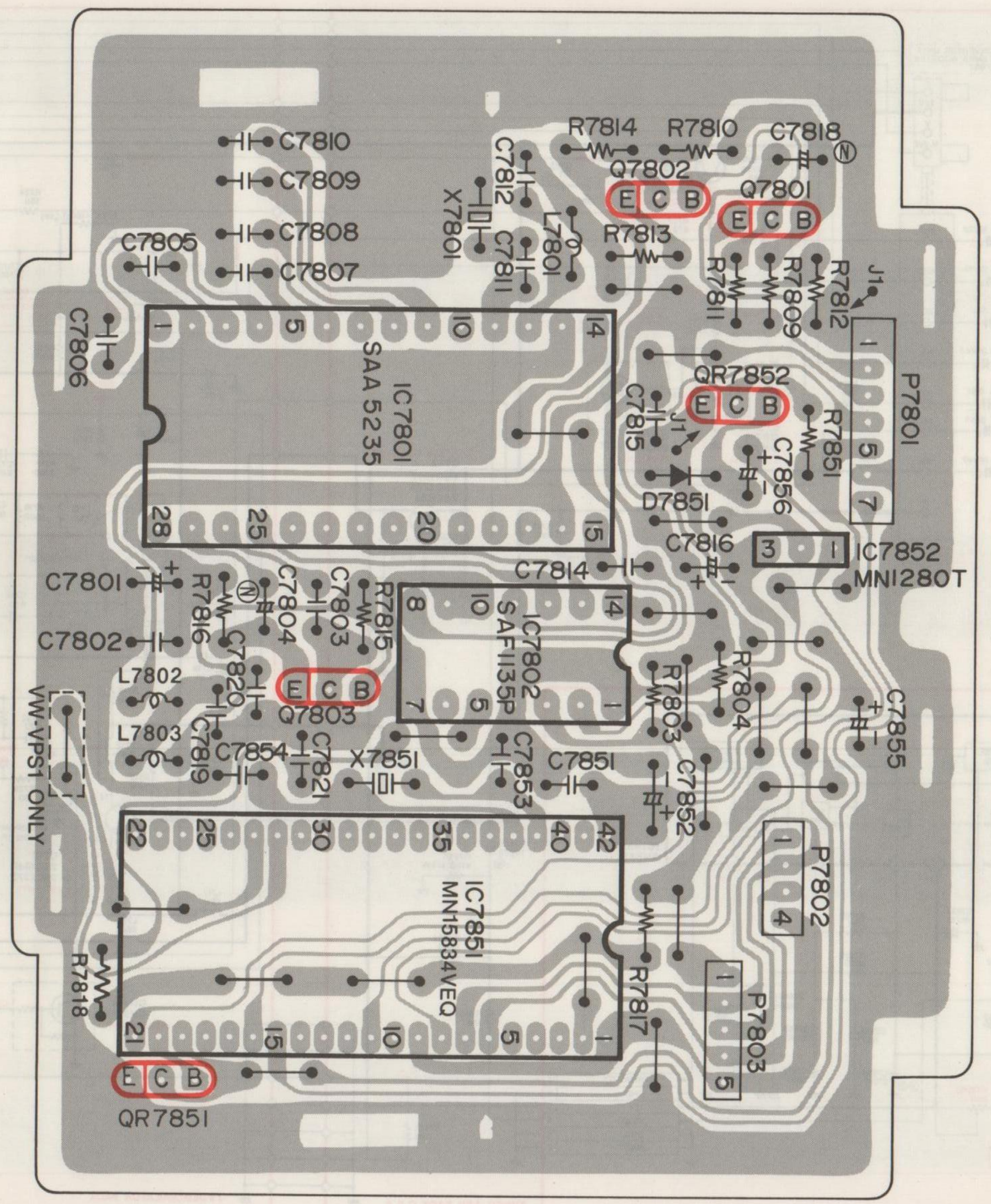

3-47. RF CONVERTER SCHEMATIC DIAGRAM (NV-G21EG)

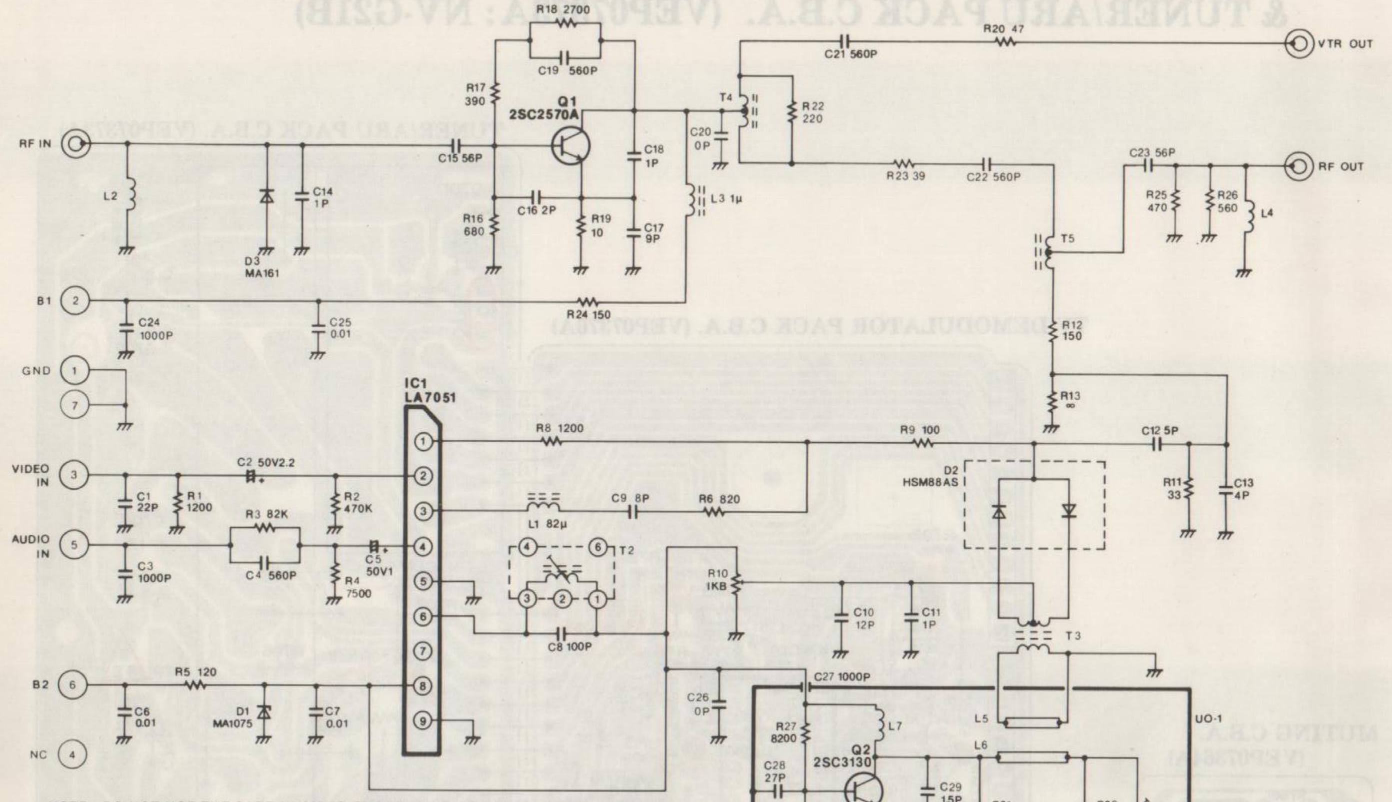

NOTE: DO NOT USE THE PART NUMBER SHOWN ON THIS DRAWING FOR ORDERING. THE CORRECT PART NUMBER IS SHOWN IN THE PARTS LIST, AND MAY BE SLIGHTLY DIFFERENT OR AMENDED SINCE THIS DRAWING WAS PREPARED.

3-48. RF CONVERTER C.B.A. (ENC87956: NV-G21EG)

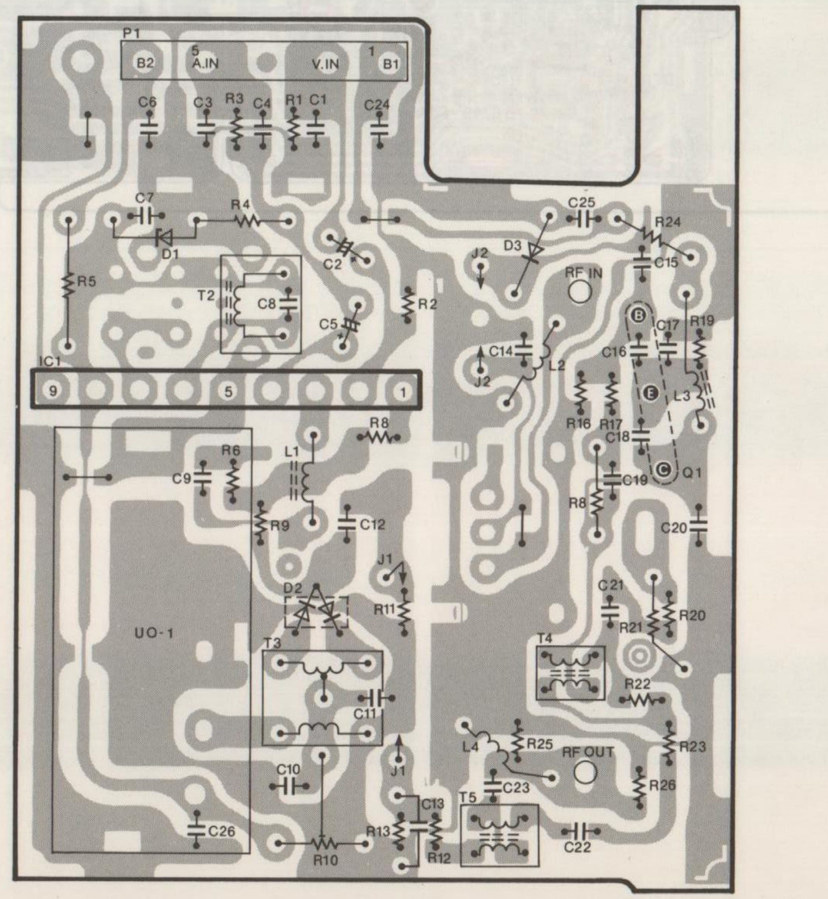

www.freeservicemanuals.info

3-49. RF CONVERTER SCHEMATIC DIAGRAM (NV-G21B)

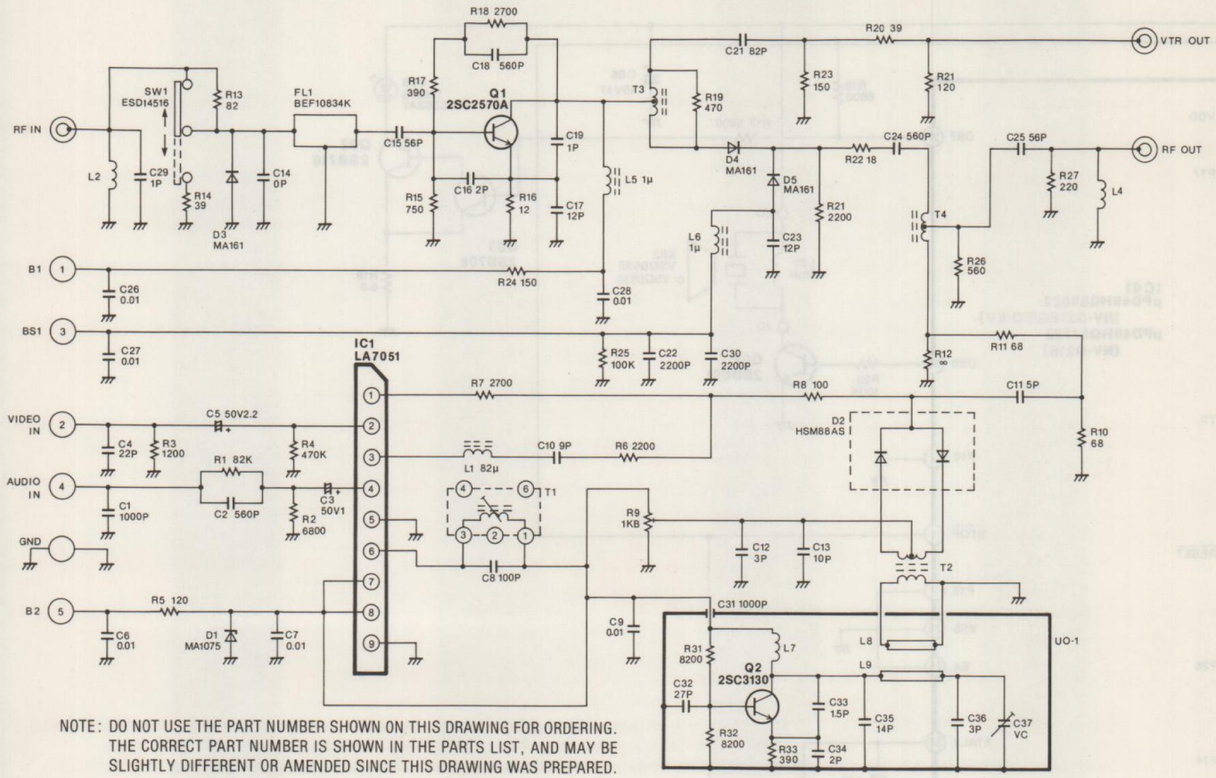

NOTE: DO NOT USE THE PART NUMBER SHOWN ON THIS DRAWING FOR ORDERING. THE CORRECT PART NUMBER IS SHOWN IN THE PARTS LIST, AND MAY BE SLIGHTLY DIFFERENT OR AMENDED SINCE THIS DRAWING WAS PREPARED.

3-50. RF CONVERTER C.B.A. (ENC87952: NV-G21B)

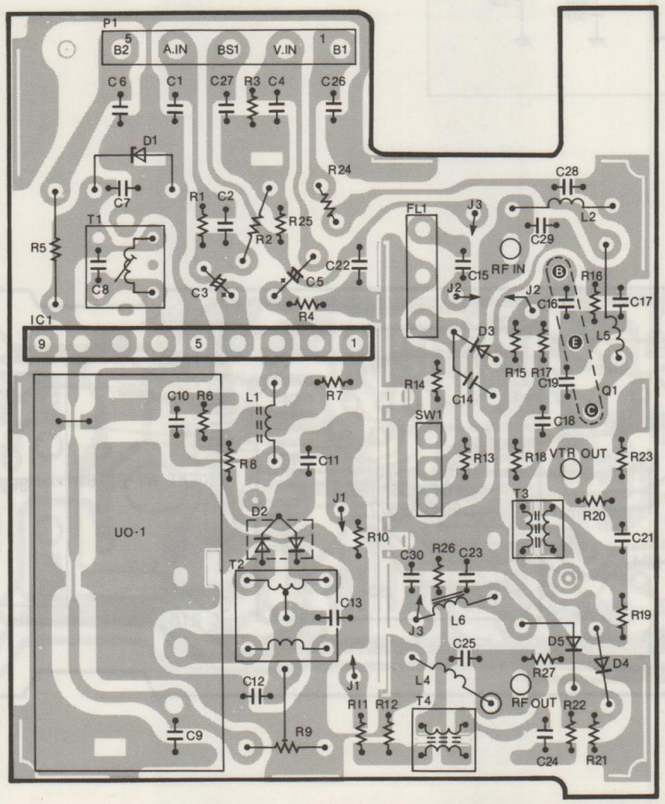

3-51. RF CONVERTER SCHEMATIC DIAGRAM (NV-G21EO/EV)

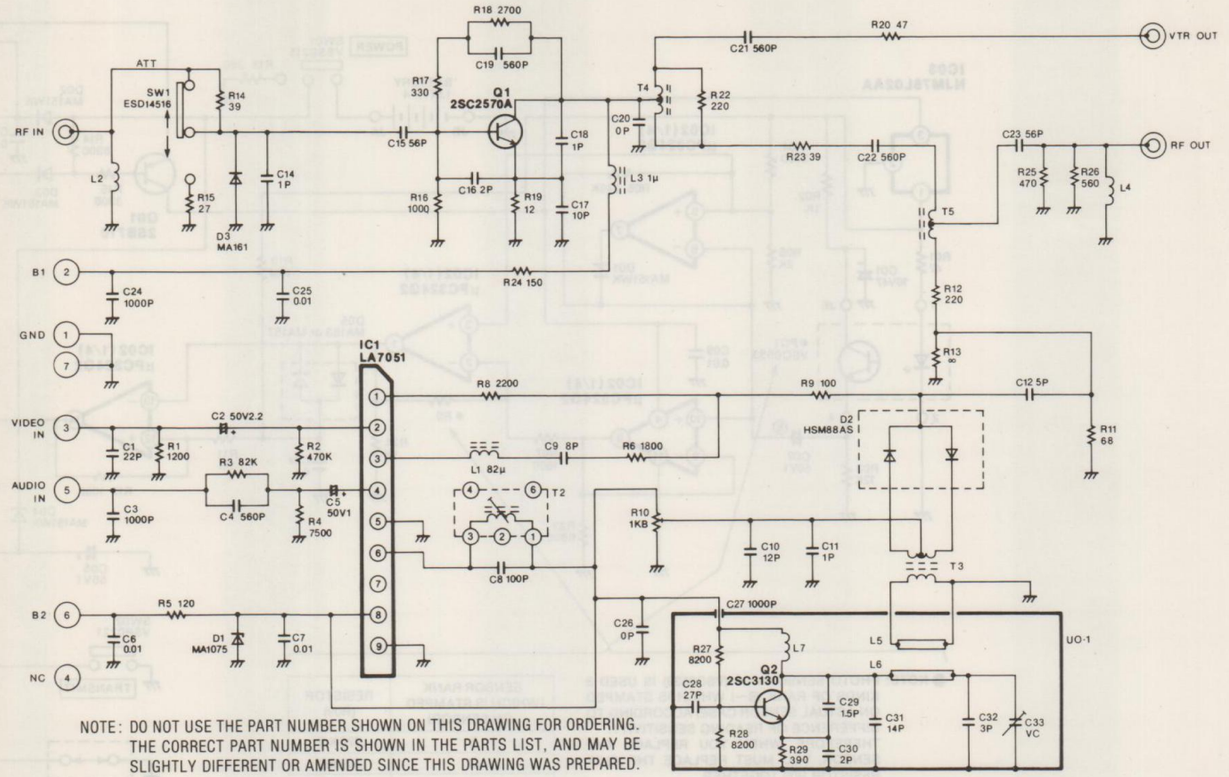

NOTE: DO NOT USE THE PART NUMBER SHOWN ON THIS DRAWING FOR ORDERING. THE CORRECT PART NUMBER IS SHOWN IN THE PARTS LIST, AND MAY BE SLIGHTLY DIFFERENT OR AMENDED SINCE THIS DRAWING WAS PREPARED.

3-52. RF CONVERTER C.B.A. (ENC87954: NV-G21EO/EV)

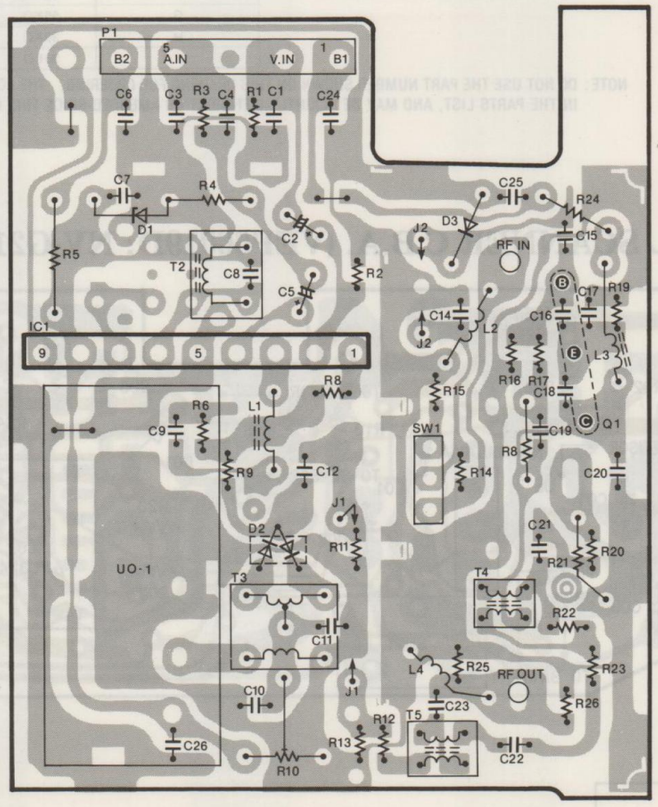

www.freeservicemanuals.info

3-53. DIGITAL SCANNER SCHEMATIC DIAGRAM —UNIT NO. : VEQ0549 (NV-G21EG/EO/EV), VEQ0540 (NV-G21B)—

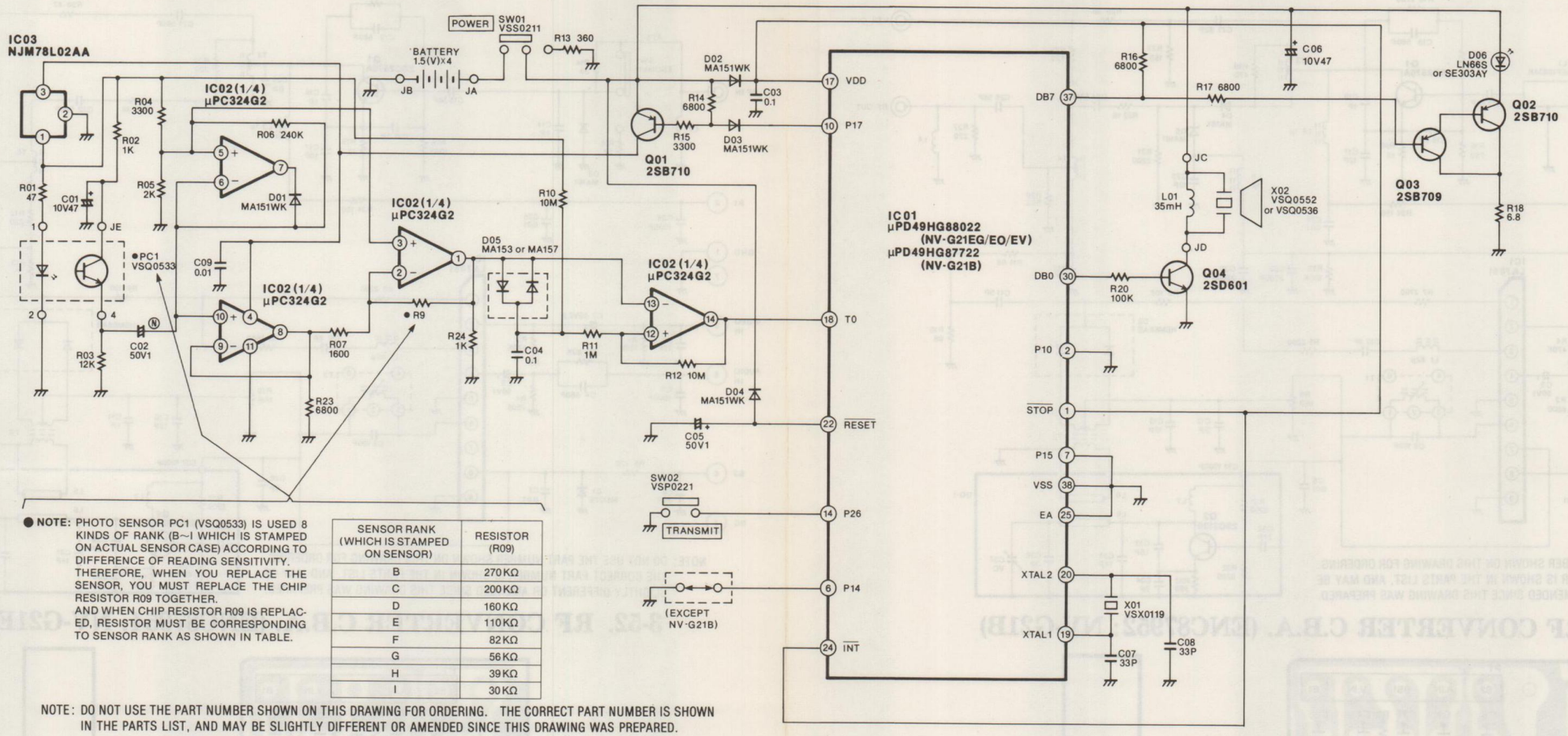

● NOTE: PHOTO SENSOR PC1 (VSQ0533) IS USED 8 KINDS OF RANK (B~I WHICH IS STAMPED ON ACTUAL SENSOR CASE) ACCORDING TO DIFFERENCE OF READING SENSITIVITY. THEREFORE, WHEN YOU REPLACE THE SENSOR, YOU MUST REPLACE THE CHIP RESISTOR R09 TOGETHER.
AND WHEN CHIP RESISTOR R09 IS REPLACED, RESISTOR MUST BE CORRESPONDING TO SENSOR RANK AS SHOWN IN TABLE.

SENSOR RANK (WHICH IS STAMPED ON SENSOR)	RESISTOR (R09)
B	270KΩ
C	200KΩ
D	160KΩ
E	110KΩ
F	82KΩ
G	56KΩ
H	39KΩ
I	30KΩ

NOTE: DO NOT USE THE PART NUMBER SHOWN ON THIS DRAWING FOR ORDERING. THE CORRECT PART NUMBER IS SHOWN IN THE PARTS LIST, AND MAY BE SLIGHTLY DIFFERENT OR AMENDED SINCE THIS DRAWING WAS PREPARED.

3-54. DIGITAL SCANNER C.B.A. (VEP66019D: NV-G21EG/EO/EV) (VEP66019E: NV-G21B)

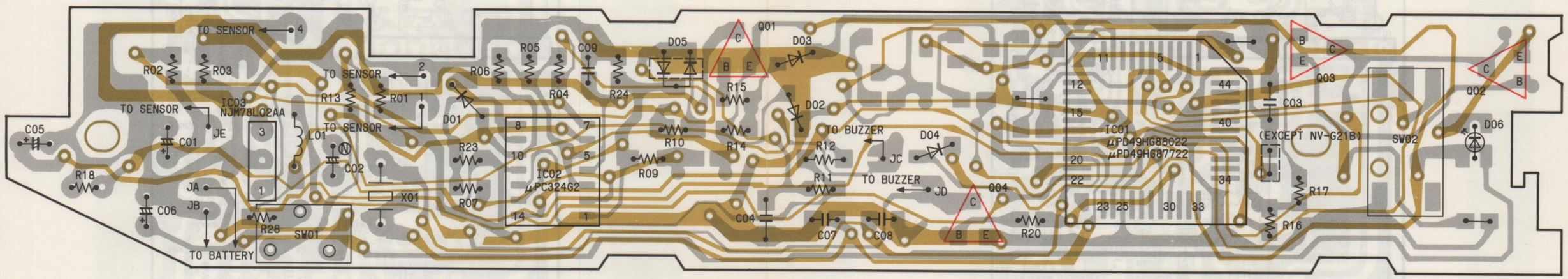

Back Page:
RF CONVERTER Section

3—24

www.freeservicemanuals.info

3-55. PROGRAMMABLE REMOTE CONTROL UNIT SCHEMATIC DIAGRAM —UNIT NO. : VEQ0534 (NV-G21EG/EO/EV), VEQ0539 (NV-G21B)—

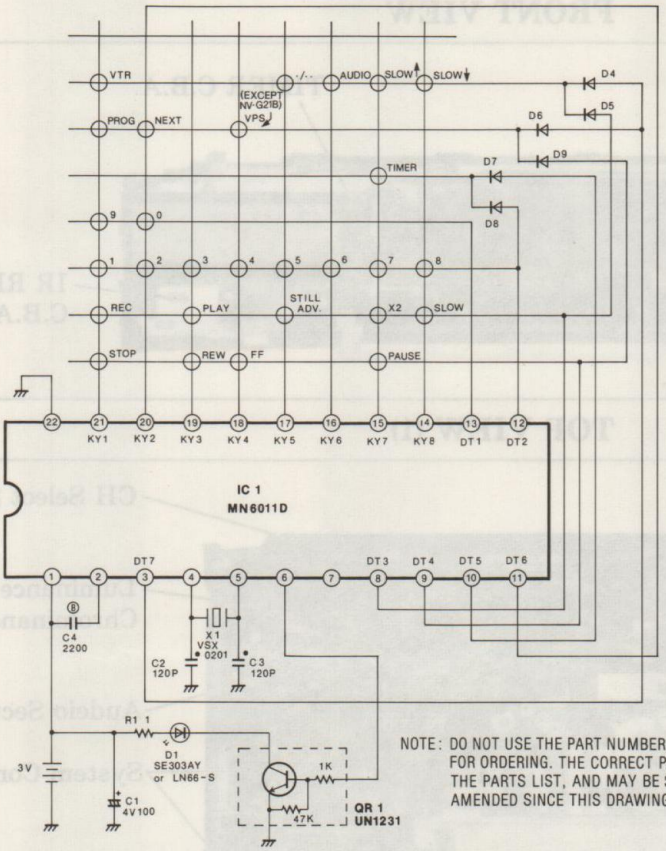

NOTE: DO NOT USE THE PART NUMBER SHOWN ON THIS DRAWING FOR ORDERING. THE CORRECT PART NUMBER IS SHOWN IN THE PARTS LIST, AND MAY BE SLIGHTLY DIFFERENT OR AMENDED SINCE THIS DRAWING WAS PREPARED.

3-56. PROGRAMMABLE REMOTE CONTROL UNIT C.B.A. (VEP22066A)

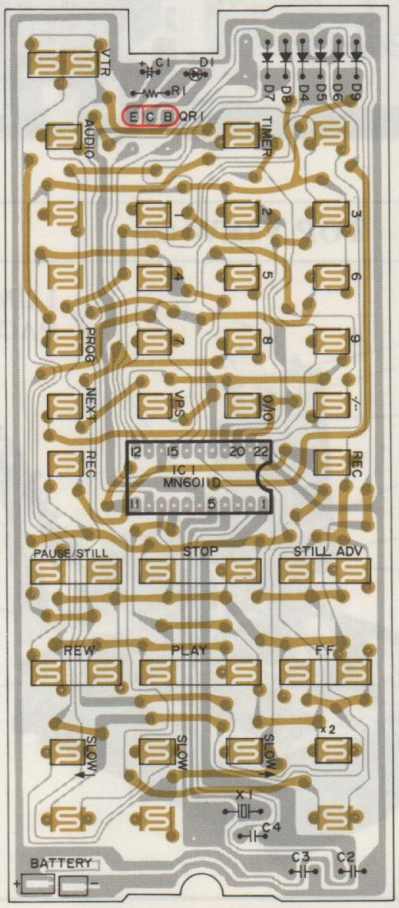

www.freeservicemanuals.info

3-57. CIRCUIT BOARD LAYOUT

FRONT VIEW

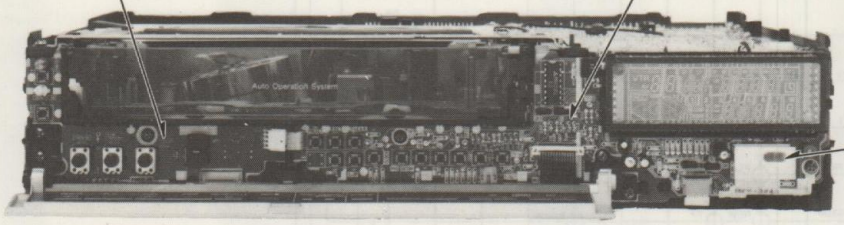

TOP VIEW (1)

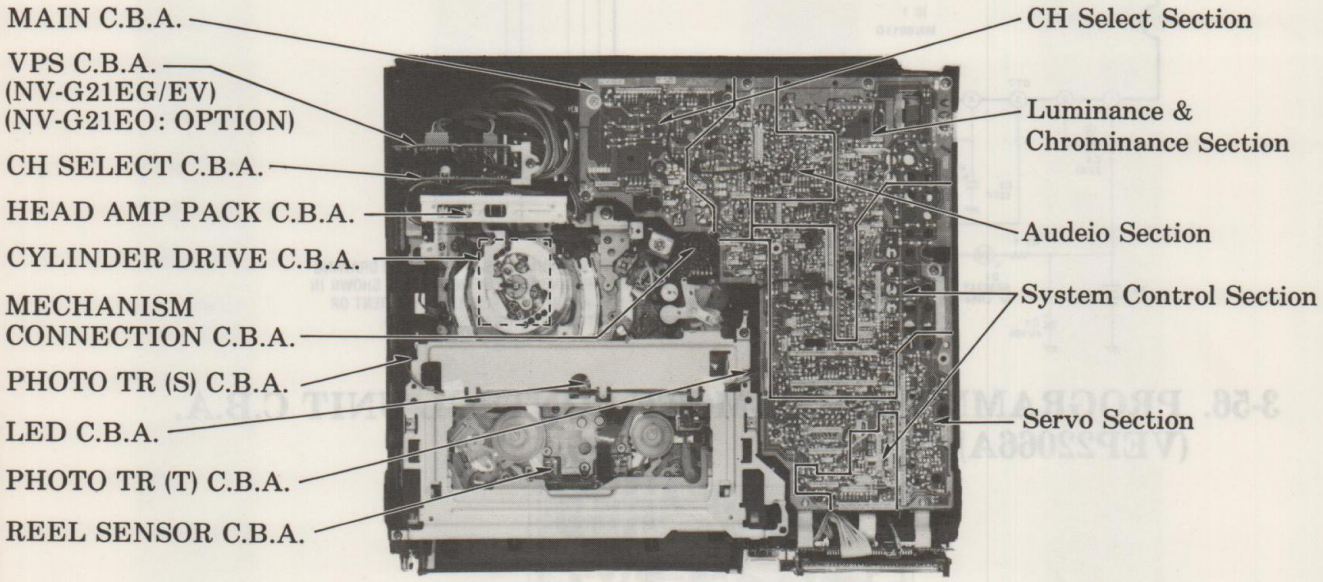

TOP VIEW (2)

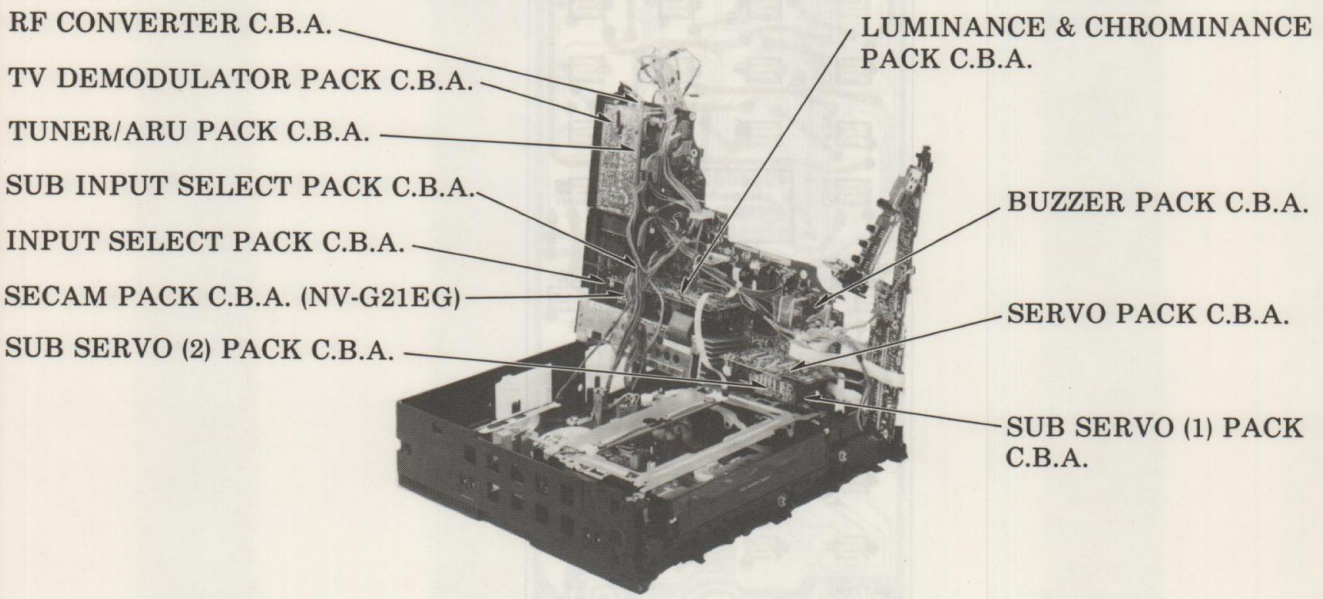

www.freeservicemanuals.info

3-58. INTERCONNECTION SCHEMATIC DIAGRAM

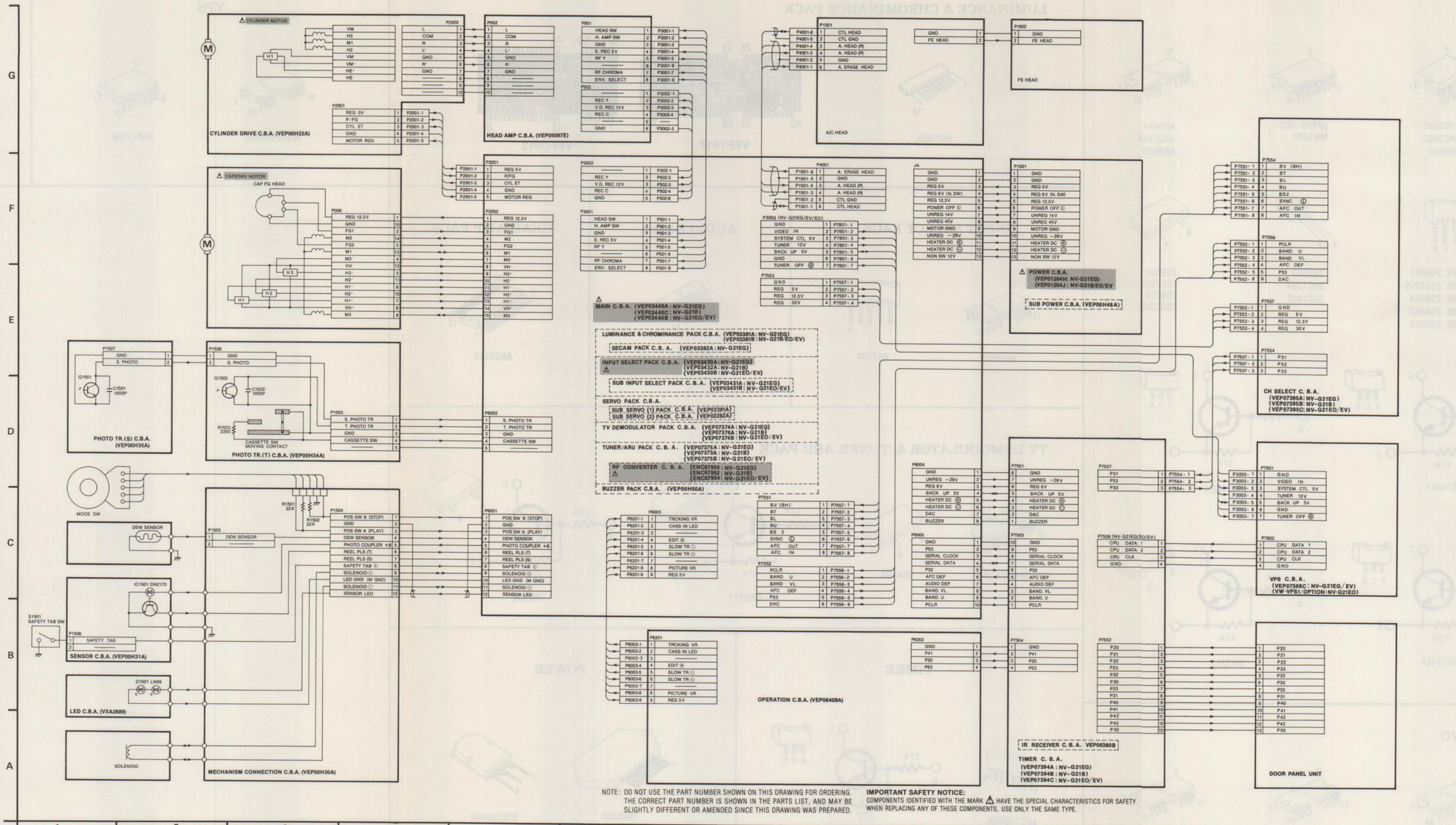

NOTE: DO NOT USE THE PART NUMBER SHOWN ON THIS DRAWING FOR ORDERING. THE CORRECT PART NUMBER IS SHOWN IN THE PARTS LIST, AND MAY BE SLIGHTLY DIFFERENT OR AMENDED SINCE THIS DRAWING WAS PREPARED.

IMPORTANT SAFETY NOTICE:
COMPONENTS IDENTIFIED WITH THE MARK ⚠ HAVE THE SPECIAL CHARACTERISTICS FOR SAFETY. WHEN REPLACING ANY OF THESE COMPONENTS, USE ONLY THE SAME TYPE.

3—27

Next Page:
ICs & TRs INFORMATION Section

www.freeservicemanuals.info

3-59. ICs & TRs INFORMATION

GENERAL CIRCUIT PARTS

AN5421
AN6913

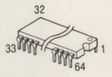

MN15362VJR
MN15283VJU

µPC393C
µPC358C
AN6552

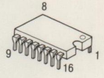

µPD4510BC
MN1220

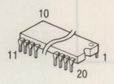

AN5034
AN3224K
AN5033

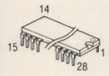

µPD6160CA
SAA5235

MN1280R
MN1280P

2SB643, 2SB641
2SB790, 2SC2206
2SD638, 2SB644
2SB636, 2SB642
2SD637, 2SD973

2SD893
2SC1384
2SC1047

2SD601
2SC2295
2SB709
2SD1328

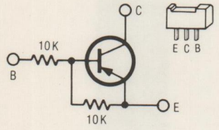

DTA114EA

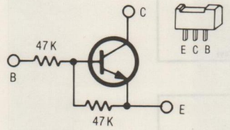

DTC144EA

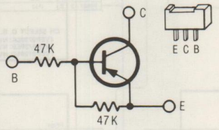

DTA144EA

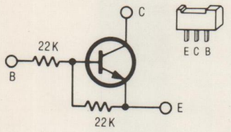

DTC124EA

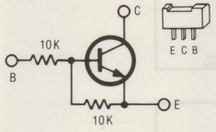

DTC114EA

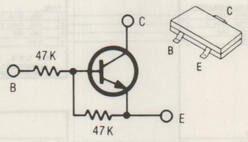

UN2213

SYSTEM CONTROL Section

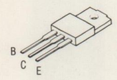

2SD1275

SERVO

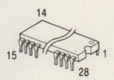

MN15311VJC

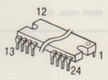

BA6430S

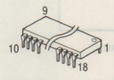

AN3812K

LUMINANCE & CHROMINANCE PACK

BA7025L

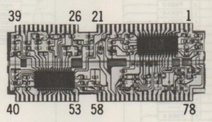

VEFY017

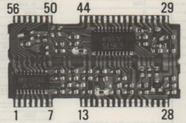

VEFC013

INPUT SELECT PACK

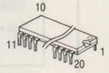

M5202P

BA7004

AUDIO Section

BA7752LS

HEAD AMP PACK

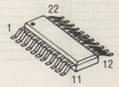

AN3311S

TV DEMODULATOR & TUNER ARU PACK

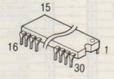

M51366SP

2SK198

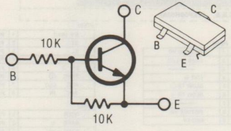

UN2211

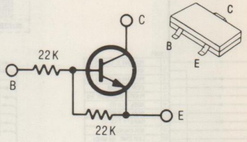

UN2212

TIMER

µPC1490HA

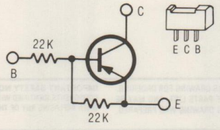

DTA124EA

POWER

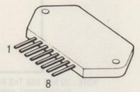

TSK5338

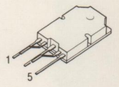

STR10006C

VPS

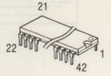

MN15834VEQ

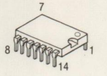

SAF1135P

CH SELECT

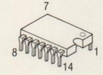

MN4066B

www.freeservicemanuals.info

SECTION 4
EXPLODED VIEW

4-1. EXPLODED VIEW

❶ CHASSIS PARTS SECTION (1)

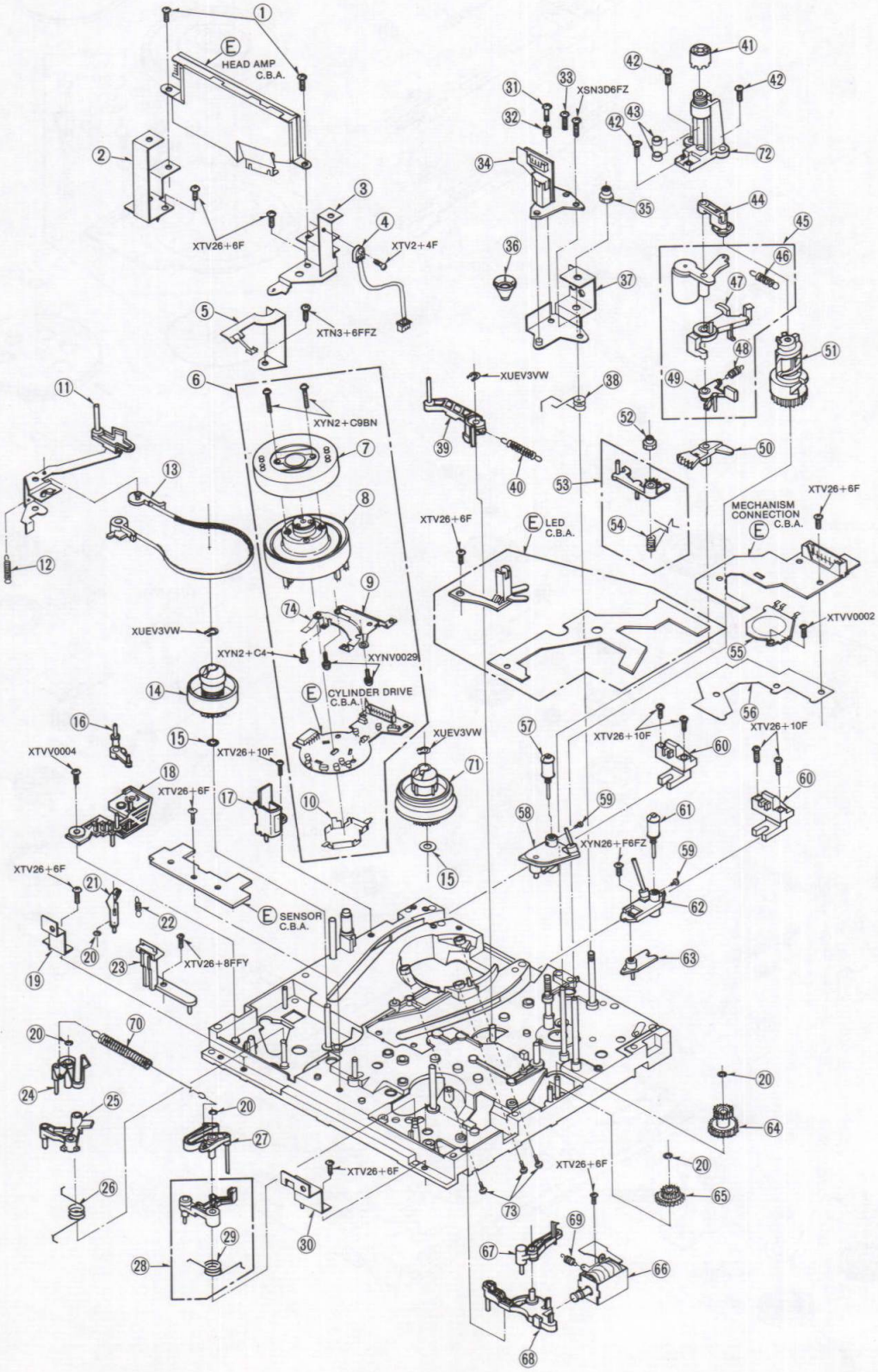

www.freeservicemanuals.info

❷ CHASSIS PARTS SECTION (2)

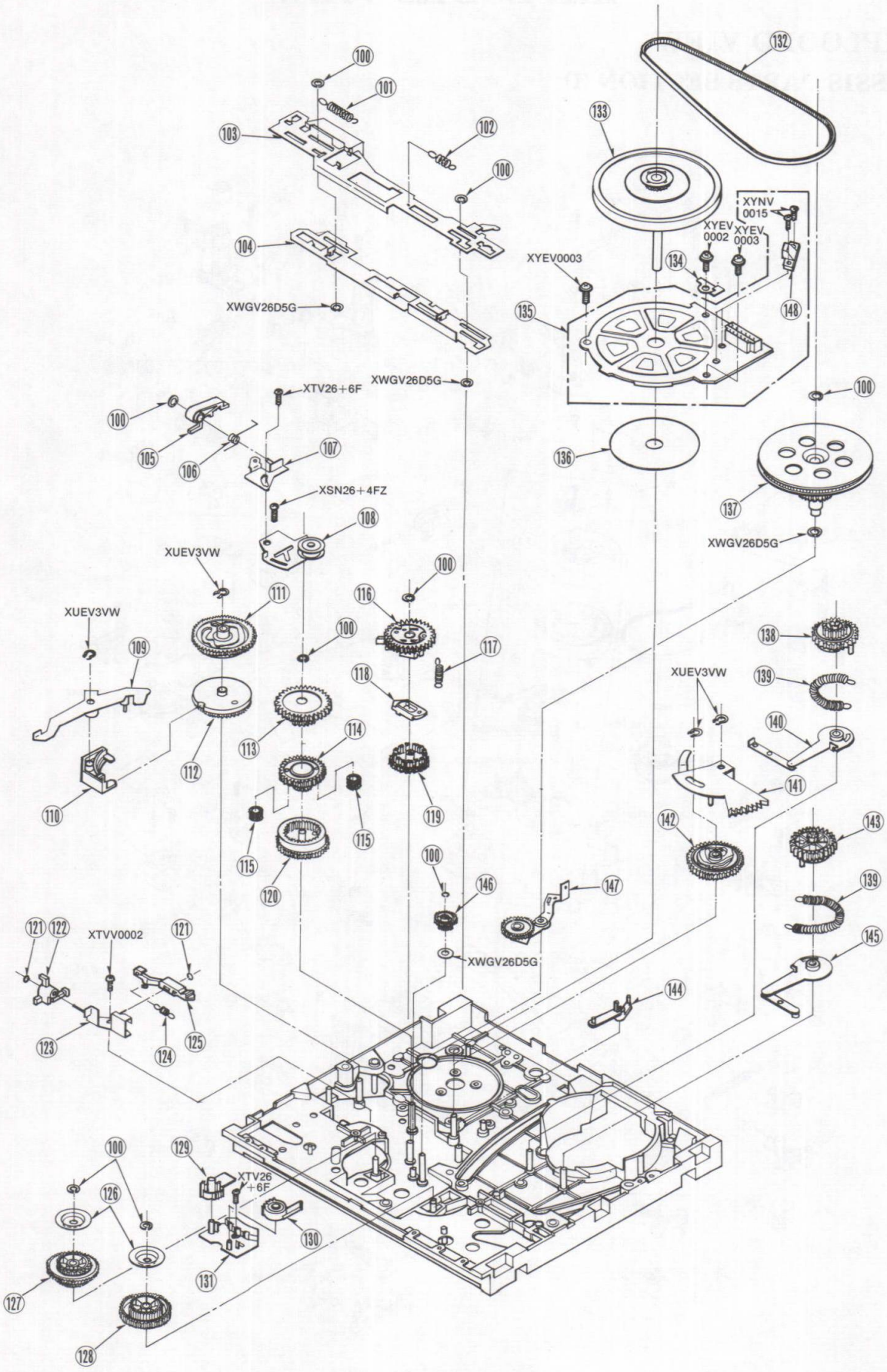

www.freeservicemanuals.info

❸ CASSETTE UP MECHANISM SECTION

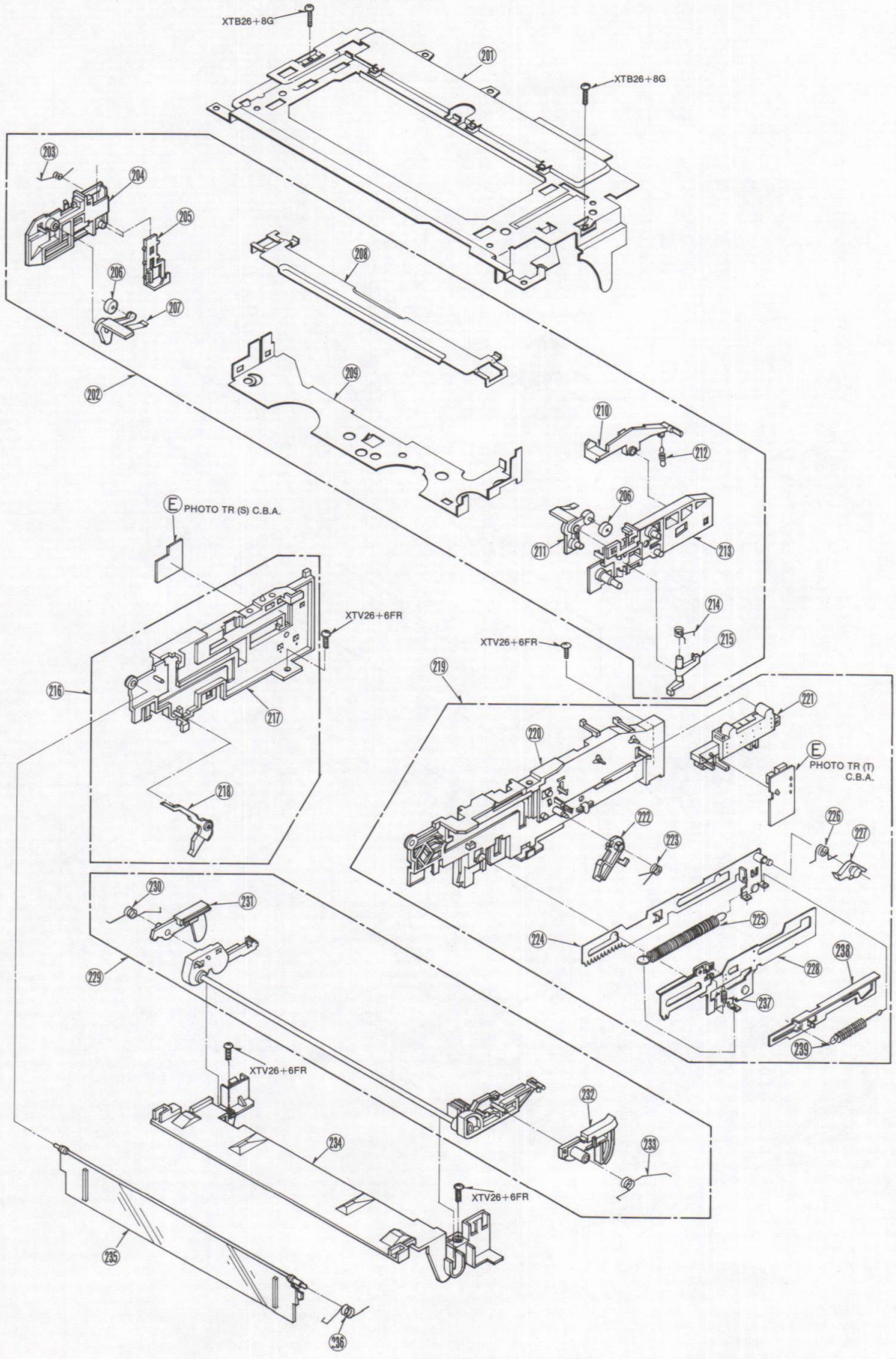

www.freeservicemanuals.info

4 CASING PARTS SECTION

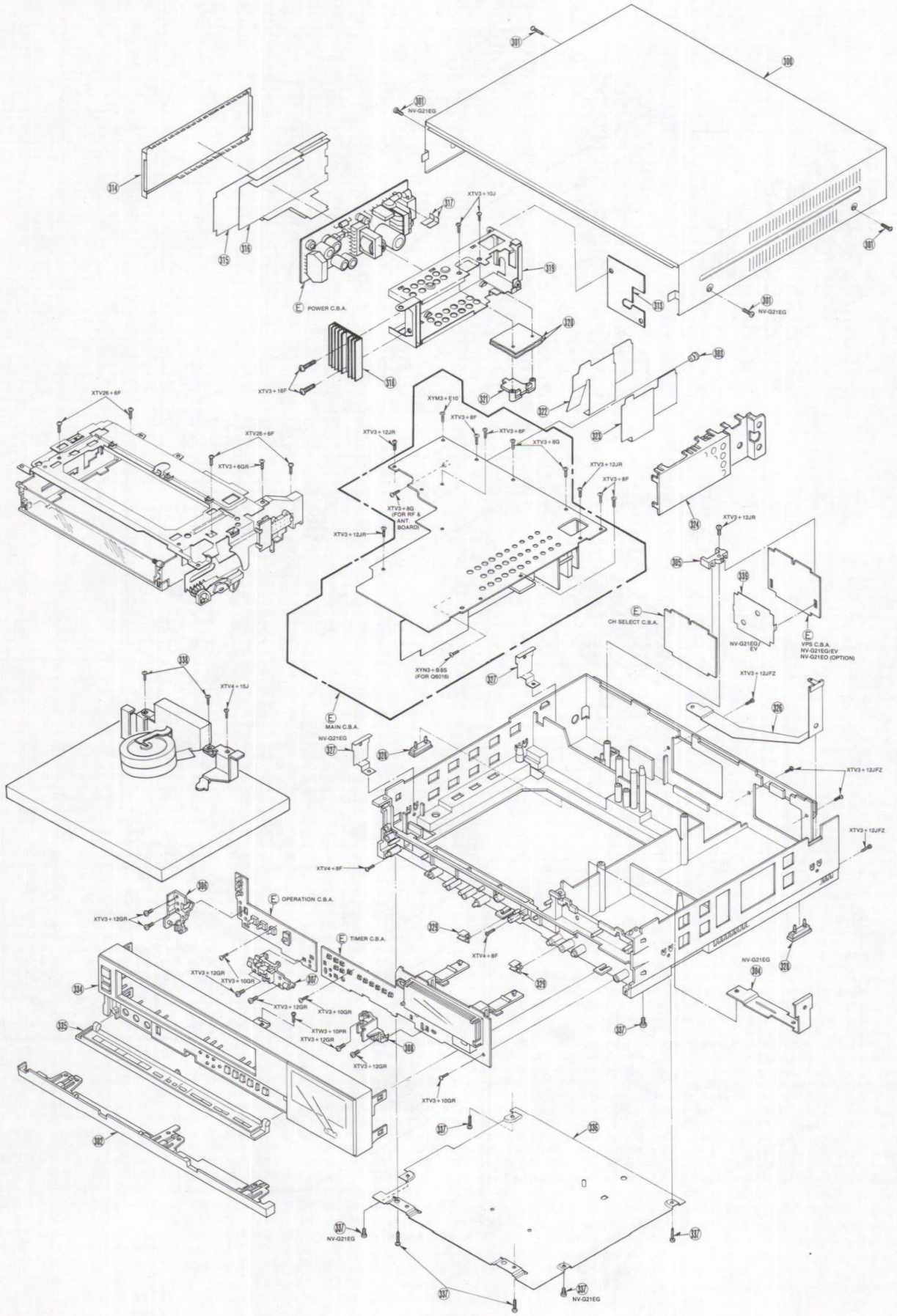

www.freeservicemanuals.info

❺ PACKING PARTS SECTION

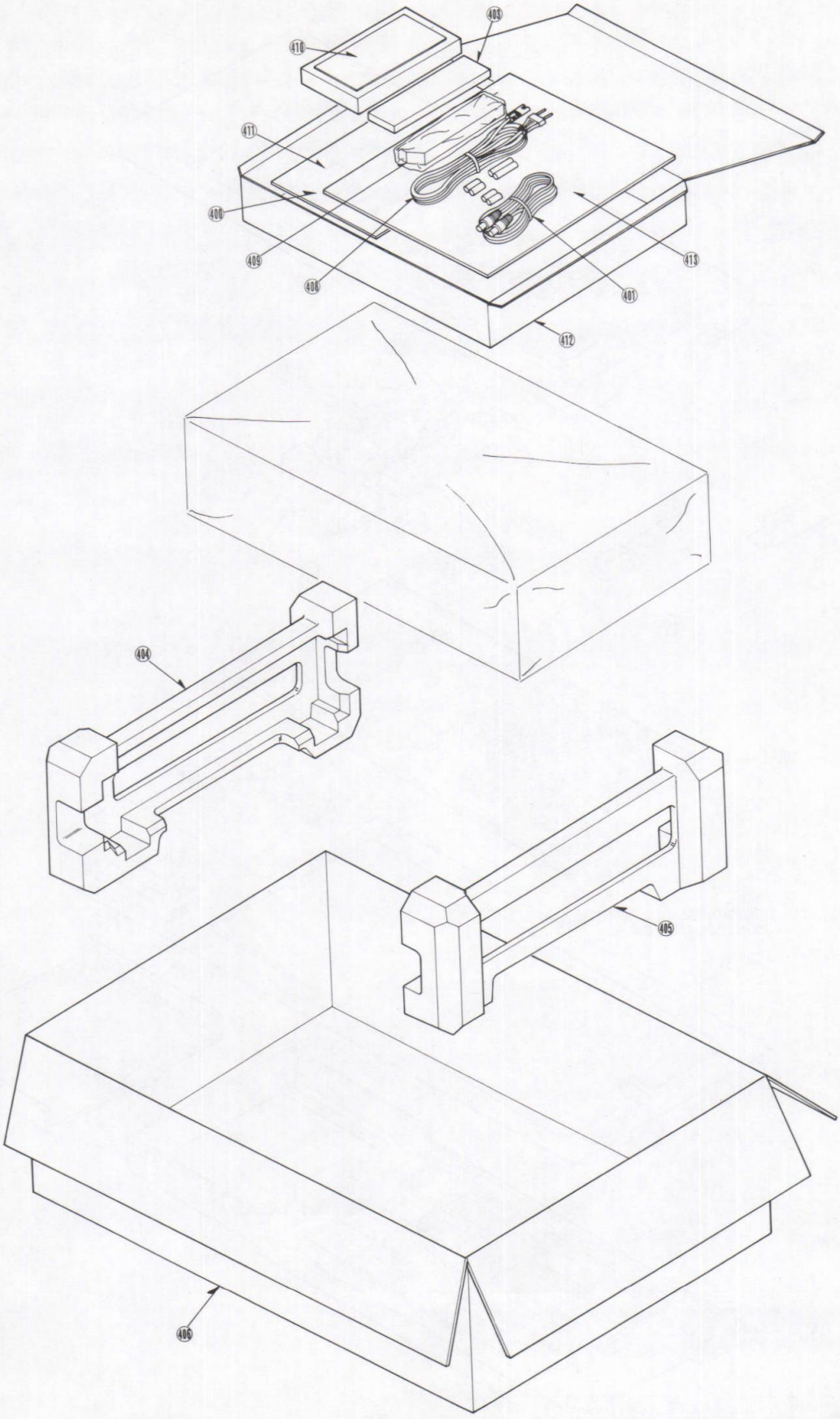

www.freeservicemanuals.info

6 PROGRAMMABLE REMOTE CONTROL UNIT

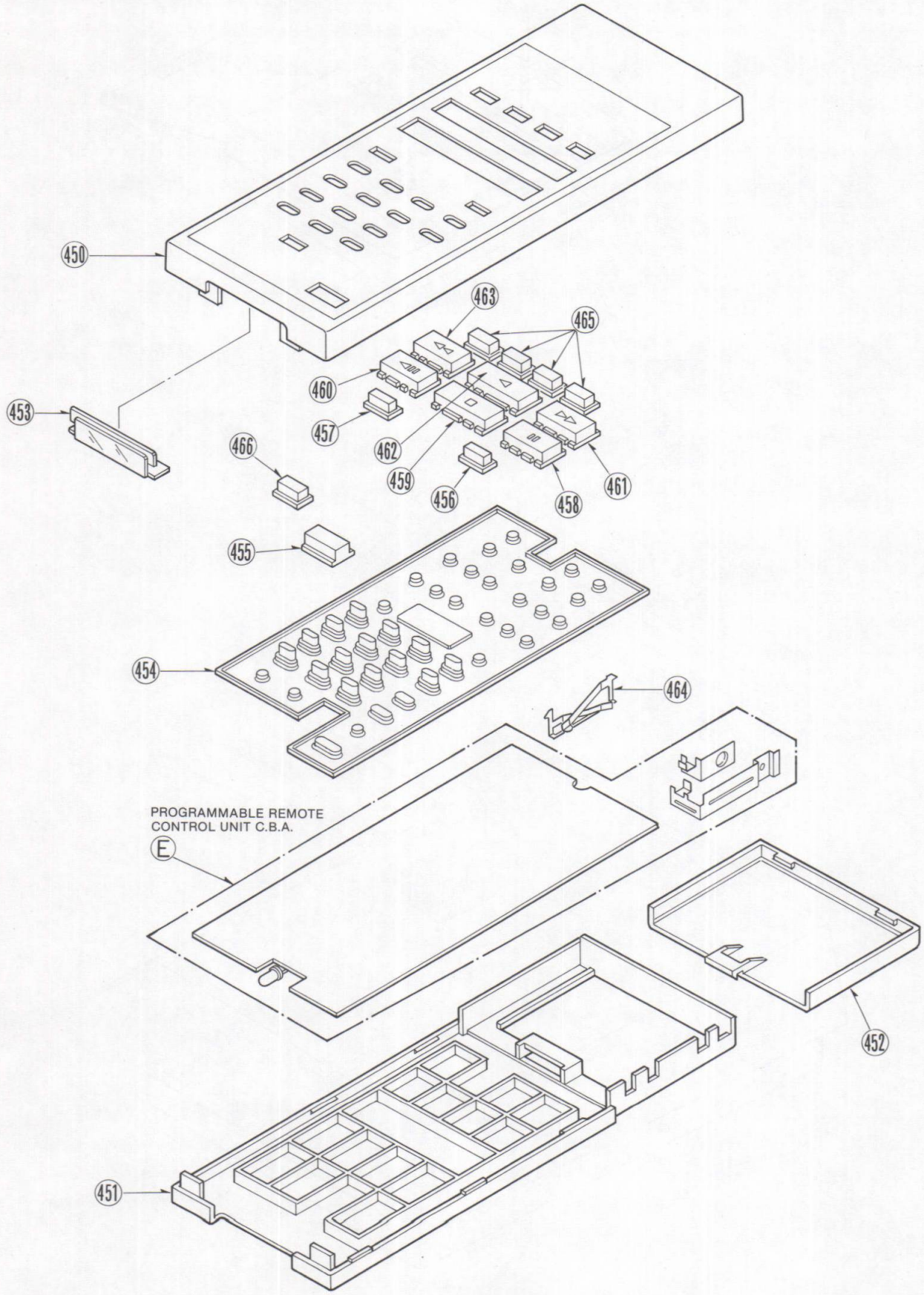

www.freeservicemanuals.info

❼ DIGITAL SCANNER

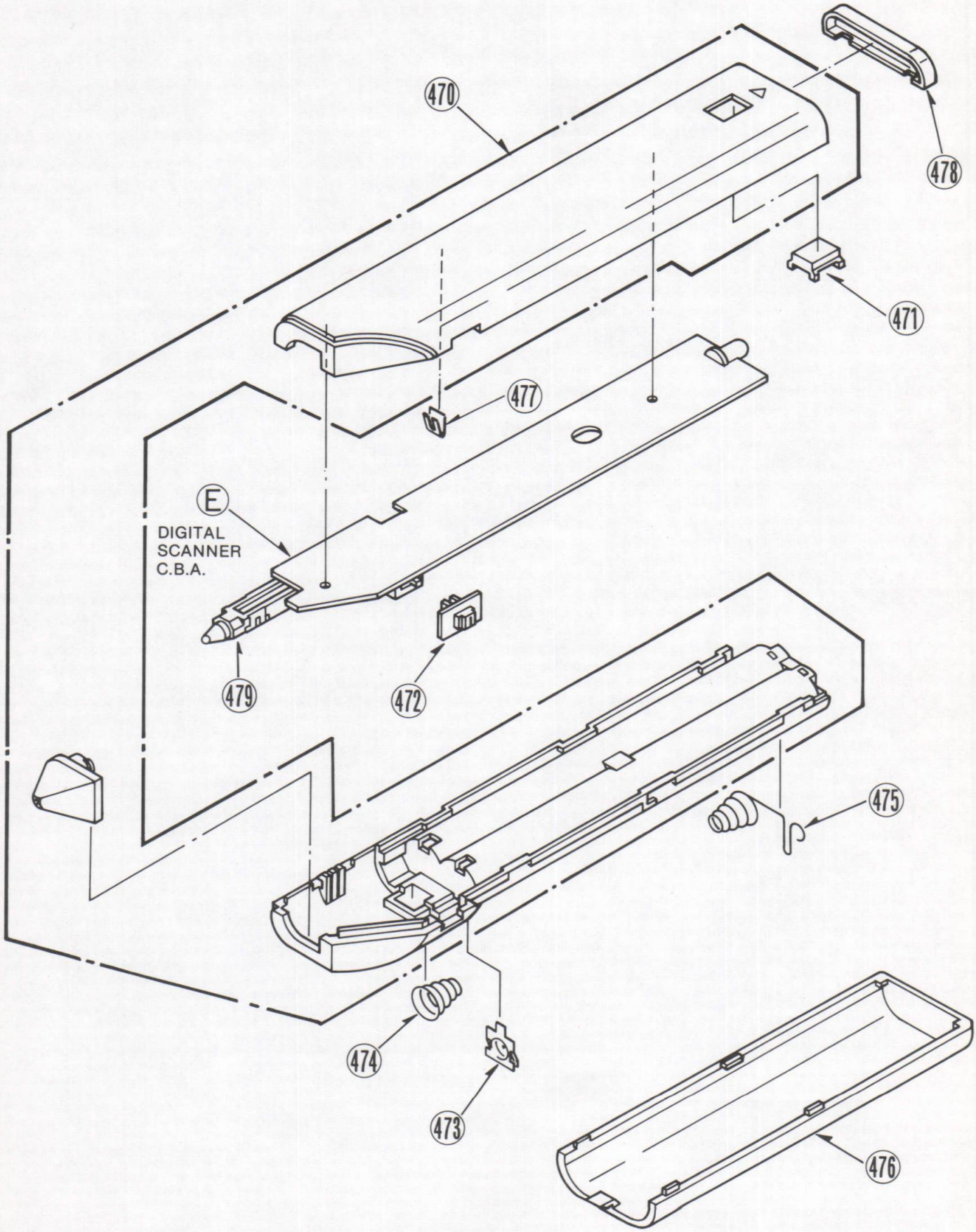

www.freeservicemanuals.info

www.freeservicemanuals.info

ORDER NO. VRD8701104A
(Date of issue : JAN, 1987)

PARTS LIST

MODEL NO : NV-G21EG/B/EO/EV

1.NV-G21EG/B/EO/EV Mechanical Replacement Parts List

※This parts list is detachable from the manual.

Note:1.* Be sure to make your orders of replacement parts according to this list.
2.IMPORTANT SAFETY NOTICE
Components identified with the mark <!> have the special characteristics for safety. When replacing any of these components,use only the same type.

Ref.No.		Part No.	Part Name & Description	Pcs	Remarks
1(1)		VHD0268	HEAD AMP SET SCREW	3	
2(1)		VMA6897	HEAD AMP MOUNT ANGLE (L)	1	
3(1)		VMA6898	HEAD AMP MOUNT ANGLE (R)	1	
4(1)		VEK3185	DEW SENSOR UNIT	1	
5(1)		VXA2702	EARTH PLATE UNIT	1	
6(1)		VEG0479	CYLINDER UNIT	1	<!>
7(1)		VEH0343	UPPER CYLINDER UNIT	1	
9(1)		VXA2703	MAIN HOLDER UNIT	1	
10(1)		VSC1806	CYLINDER C.B.A SHIELD PLATE	1	
11(1)		VXL1495	TENSION ARM (1) UNIT	1	
12(1)		VMB1563	TENSION SPRING	1	
13(1)		VXZ0225	TENSION BAND UNIT	1	
14(1)		VXR0145	SUPPLY REEL TABLE UNIT	1	
15(1)		VMX1171	REEL WASHER	2	
16(1)		VXL1496	TENSION RELEASE ARM(A)UNIT	1	
17(1)		VBS0038	FE HEAD	1	
18(1)		VXA2705	TENSION ARM BASE (1) UNIT	1	
19(1)		VMA6895	MOUNT ANGLE (L)	1	
20(1)		VMX1079	CUT WASHER	5	
21(1)		VXL1497	TENSION RELEASE ARM(B)UNIT	1	
22(1)		VMB1582	TENSION RELEASE SPRING	1	
23(1)		VES0350	SAFETY SW	1	
24(1)		VXZ0229	SUPPLY MAIN BRAKE UNIT	1	
25(1)		VXZ0228	SUPPLY SOFT BRAKE(1)UNIT	1	
26(1)		VMB1564	SUPPLY SOFT BRAKE SPRING	1	
27(1)		VXZ0231	TAKE UP MAIN BRAKE UNIT	1	
28(1)		VXZ0221	TAKE UP SOFT BRAKE UNIT	1	
29(1)		VMB1561	TAKE UP SOFT BRAKE SPRING	1	
30(1)		VMA6896	MOUNT ANGLE (R)	1	
31(1)		VHD0322	ADJUST SCREW	1	
32(1)		VMB1251	ADJUST SPRING	1	
33(1)		VHD0089B	AZIMUTH ADJUST SCREW	1	
34(1)		VBR0112	A/C HEAD	1	
35(1)		VHN0063	M4 NYLON NUT	1	
36(1)		VHN0050	ADJUST NUT	1	
37(1)		VXA2675	HEAD BASE UNIT	1	
38(1)		VMB1567	A/C HEAD SPRING	1	
39(1)		VXL1480	SUB LOADING ARM (1) UNIT	1	
40(1)		VMB1566	SUB POST SPRING	1	
41(1)		VXQ0006	THRUST SCREW UNIT	1	
42(1)		VHD0317	HOUSING SCREW	3	
43(1)		VMX1033	OIL SEAL	2	
44(1)		VMX1078	PINCH CAM CAP	1	
45(1)		VXL1481	PRESSURE ROLLER UNIT	1	
46(1)		VMB1568	PIN PRESSURE SPRING	1	
47(1)		VML1873	PINCH PRESSURE ARM	1	
48(1)		VMB1569	PINCH PRESSURE ARM RELEASE SPRING	1	
49(1)		VML1874	PINCH LIFT ARM	1	
50(1)		VDG0357	P5 PULL OUT SECTOR GEAR	1	
51(1)		VDG0356	PINCH CAM	1	
52(1)		VHN0023	M3 NYLON NUT	1	
53(1)		VXL1485	P5 UNIT	1	
54(1)		VMB1554	P5 SPRING	1	
55(1)		VSS0175A	MODE SW	1	
56(1)		VSC1851	SHIELD PLATE	1	
57(1)		VXP0764B	ROLLER POST UNIT	1	
58(1)		VXA2729	INCLIND BASE (S)(1)UNIT	1	
59(1)		VHD0133	ROLLER POST SCREW	2	
60(1)		VMD0910	POST STOPPER	2	
61(1)		VXP0764A	ROLLER POST UNIT	1	
62(1)		VXA2686	INCLIND BASE(T)(1)UNIT	1	
63(1)		VXA2687	INCLIND ADJUST PLATE UNIT	1	
64(1)		VDG0334	PINCH SPEED DOWN GEAR	1	
65(1)		VDG0332	CONNECTION GEAR	1	
66(1)		VXA2693	SOLENOID	1	
67(1)		VXA2692	KICK ROD UNIT	1	
68(1)		VXA2691	SOLENOID LEVER (1) UNIT	1	
69(1)		VMB1553	KICK ROD SPRING	1	
70(1)		VMB1565	MAIN BRAKE SPRING	1	
71(1)		VXR0146	TAKE UP REEL TABLE UNIT	1	
72(1)		VXD0101	HOUSING UNIT	1	
73(1)		VHD0342	CYLINDER UNIT MOUNT SCREW	3	
74(1)		VSC1843	HEAT SINK PLATE	1	
100(2)		VMX1079	CUT WASHER	8	
101(2)		VMB1583	TAKE UP SOFT BRAKE RELEASE ARM SPRING	1	
102(2)		VMB1560	MAIN LEVER SPRING	1	
103(2)		VXA2701	MAIN LEVER (1) UNIT	1	
104(2)		VMM0160	SUB LEVER	1	
105(2)		VXL1500	SS BRAKE ARM UNIT	1	
106(2)		VMB1588	SS BRAKE SPRING	1	
107(2)		VXA2707	SS BRAKE BASE (1) UNIT	1	
108(2)		VXA2674	TENSION ROLLER UNIT	1	
109(2)		VXL1491	CAM FOLLOWER ARM UNIT	1	
110(2)		VML1861	DETENT ARM	1	
111(2)		VDG0346	MAIN CAM GEAR	1	
112(2)		VDG0343	SUB CAM GEAR	1	
113(2)		VDG0348	CENTRE GEAR	1	
114(2)		VDG0344	RETAINER GEAR	1	
115(2)		VDG0345	PLANET GEAR	2	
116(2)		VDG0349	CLUTCH DISK	1	
117(2)		VMB1558	CLUTCH SPRING	1	
118(2)		VDG0350	LOCK SLIDE GEAR	1	
119(2)		VDG0335	DRIVE DISK	1	
120(2)		VDG0342	RING GEAR	1	
121(2)		VMX0967	CUT WASHER	2	
122(2)		VML1859	CHANGE LEVER	1	
123(2)		VXA2672	RELEASE LEVER (1) UNIT	1	
124(2)		VMB1557	RELEASE SPRING	1	
125(2)		VML1860	RELEASE LEVER	1	
126(2)		VMX1124	REEL GEAR RING	2	
127(2)		VXP0779	TAKE UP REEL GEAR UNIT	1	
128(2)		VDG0337	SUPPLY REEL GEAR	1	
129(2)		VML1858	RETURN LEVER (R)	1	
130(2)		VML1857	RETURN LEVER (L)	1	
131(2)		VMD0913	STOPPER BASE	1	
132(2)		VDV0159	TIMING BELT	1	
133(2)		VXP0777	ROTOR UNIT	1	
134(2)		VMA6998	ROTOR STOPPER	1	
135(2)		VEK2944	STATOR UNIT	1	<!>
136(2)		VMA6847	SUB PLATE	1	
137(2)		VXP0769	CENTRE PULLEY UNIT	1	
138(2)		VDG0340	LOADING GEAR (T)	1	
139(2)		VMB1555	LOADING SPRING	2	
140(2)		VXL1489	LOADING ARM (T)(1) UNIT	1	
141(2)		VXA2673	SECTOR GEAR UNIT	1	
142(2)		VDG0347	LOADING CAM GEAR	1	
143(2)		VDG0339	LOADING GEAR (S)	1	
144(2)		VML1855	PLAY CONTROL ARM	1	
145(2)		VXL1487	LOADING ARM (S)(1) UNIT	1	
146(2)		VDG0336	INTERMEDIATE GEAR	1	
147(2)		VXL1490	PLAY ARM UNIT	1	
148(2)		VBK0048	FG HEAD	1	
201(3)		VMA6903	TOP PLATE	1	
202(3)		VXA2679	CASSETTE HOLDER UNIT	1	
203(3)		VMB1573	MOUNT LEVER SPRING	1	
204(3)		VMD0919	HOLDER GUIDE (L)	1	
205(3)		VMM0163	MOUNT LEVER	1	
206(3)		VDP1077	ROLLER	2	
207(3)		VML1883	PRESSURE LEVER (L)	1	
208(3)		VMA6902	HOLDER ANGLE	1	
209(3)		VMA6901	CASSETTE HOLDER	1	
210(3)		VML1882	OPENER LEVER	1	
211(3)		VML1884	PRESSURE LEVER (R)	1	
212(3)		VMB1584	OPENER LEVER SPRING	1	
213(3)		VMD0920	HOLDER GUIDE (R)	1	
214(3)		VMB1576	RELEASE SPRING	1	
215(3)		VML1881	RELEASE LEVER	1	
216(3)		VXA2676	SIDE PLATE (L) UNIT	1	
217(3)		VMD0917	SIDE PLATE (L)	1	
218(3)		VML1880	OPENER LEVER	1	
219(3)		VXA2677	SIDE PLATE (R) UNIT	1	
220(3)		VMD0918	SIDE PLATE (R)	1	
221(3)		VSS0176	SLIDE SW	1	

www.freeservicemanuals.info

Ref.No.		Part No.	Part Name & Description	Pcs	Remarks
222(3)		VML1886	DOWN SUPPORT LEVER	1	
223(3)		VMB1575	DOWN SUPPORT SPRING	1	
224(3)		VXA2695	RACK (A)(1) UNIT	1	
225(3)		VMB1572	CLUTCH SPRING	1	
226(3)		VMB1574	LOCK SPRING	1	
227(3)		VML1885	LOCK LEVER	1	
228(3)		VXA2829	RACK (B) UNIT	1	
229(3)		VXP0851	MAIN SHAFT UNIT	1	
230(3)		VMB1570	SUB WIPER SPRING (L)	1	
231(3)		VML1878	SUB WIPER ARM	1	
232(3)		VML1879	SUB WIPER ARM (R)	1	
233(3)		VMB1571	SUB WIPER SPRING (R)	1	
234(3)		VMA6900	CASSETTE GUIDE	1	
235(3)		VKF0848	BLINDER PANEL	1	
236(3)		VMB1258	BLINDER SPRING	1	
237(3)		VMB1650	RACK (C) SPRING	1	
238(3)		VMA7062	CONNECTION ROD	1	
239(3)		VMB1686	CONNECTION ROD	1	
300(4)		VYP1891	TOP PANEL UNIT	1	NV-G21EG (BLACK)
300(4)		VYP1892	TOP PANEL UNIT	1	NV-G21EG (SILVER)
300(4)		VYP1895	TOP PANEL UNIT	1	NV-G21B/EO/EV (BLACK)
300(4)		VYP1896	TOP PANEL UNIT	1	NV-G21EO/EV (SILVER)
301(4)		VHD0304	TOP PANEL SCREW	4	NV-G21EG (BLACK)
301(4)		VHD0305	TOP PANEL SCREW	4	NV-G21EG (SILVER)
301(4)		VHD0304	TOP PANEL SCREW	2	NV-G21B/EO/EV (BLACK)
301(4)		VHD0305	TOP PANEL SCREW	2	NV-G21EO/EV (SILVER)
302(4)		VYP1803	FRONT LOWER PANNEL	1	
303(4)		VMG0272	RF CONVERTER BUSHING	1	
304(4)		VMP1125	TOP HOLDER ANGLE	1	NV-G21EG
305(4)		VGQ1160	C.B. HOLDER	1	
306(4)		VGQ1084	HOLDER (A)	1	
307(4)		VGQ1085	HOLDER (B)	1	
308(4)		VGQ1086	HOLDER (C)	1	
313(4)		VGH1127	POWER NAME PLATE	1	
314(4)		VSC1827	SHIELD CASE (L)	1	
315(4)		VMZ0916	BARRIER (B)	1	<!>
316(4)		VMZ0902	BARRIER (A)	1	<!>
317(4)		VMZ0948	BARRIER (E)	1	<!>
318(4)		VSC1830	HEAT SINK	1	
319(4)		VSC1924	SHIELD CASE MAIN	1	
320(4)		VMZ0876	INSULATION SHEET	2	<!>
321(4)		VGQ1109	TR. HOLDER	1	
322(4)		VMZ0917	BARRIER (C)	1	<!>
323(4)		VMZ0918	BARRIER (D)	1	<!>
324(4)		VSC1829	SHIELD CASE (R)	1	
326(4)		VMP1038	TOP HOLDER ANGLE (R)	1	
327(4)		VMP1037	TOP HOLDER ANGLE (L)	2	NV-G21EG
327(4)		VMP1037	TOP HOLDER ANGLE (L)	1	NV-G21B/EO/EV
328(4)		VKA0026	RUBBER FOOT	2	
329(4)		VJF0285	WIRE SUDDLE	2	
334(4)		VYP1879	FRONT PANEL UNIT	1	NV-G21EG/EO/EV
					(BLACK)
334(4)		VYP1880	FRONT PANEL UNIT	1	NV-G21EG/EO/EV
					(SILVER)
334(4)		VYP1883	FRONT PANEL UNIT	1	NV-G21B
335(4)		VYF1025	FRONT DOOR UNIT	1	NV-G21EG/EO/EV
					(BLACK)
335(4)		VYF1026	FRONT DOOR UNIT	1	NV-G21EG/EO/EV
					(SILVER)
335(4)		VYF1035	FRONT DOOR UNIT	1	NV-G21B
336(4)		VKU0245	BOTTOM PLATE	1	
337(4)		VHD0059	BOTTOM SCREW	7	NV-G21EG
337(4)		VHD0059	BOTTOM SCREW	5	NV-G21B/EO/EV
338(4)		VHD0268	SCREW	2	
339(4)		VMZ1005	BARRIER	1	NV-G21EG/EV
400(5)		VQT2203	OPERATING INSTRUCTIONS	1	NV-G21EG/EO/EV
					(ENGLISH,GARMAN,
					FRENCH) <!>
400(5)		VQT2206	OPERATING INSTRUCTIONS	1	NV-G21B(ENGLISH) <!>
400(5)		VQT2204	OPERATING INSTRUCTIONS	1	NV-G21EO(SWEDISH,
					DANISH,DUTCH) <!>
400(5)		VQT2205	OPERATING INSTRUCTIONS	1	NV-G21EO(FINNISH,
					ITALIAN,SPANISH) <!>
401(5)		VJA0376	DIN RF CABLE	1	
403(5)		VEQ0534	REMOTE CONTROL UNIT	1	NV-G21EG/EO/EV

Ref.No.		Part No.	Part Name & Description	Pcs	Remarks
403(5)		VEQ0539	REMOTE CONTROL UNIT	1	NV-G21B
404(5)		VPN1709	CUSHION (R)	1	
405(5)		VPN1710	CUSHION (L)	1	
406(5)		VPG3309	PACKING CASE	1	NV-G21EG(BLACK)
406(5)		VPG3310	PACKING CASE	1	NV-G21EG(SILVER)
406(5)		VPG3315	PACKING CASE	1	NV-G21B
406(5)		VPG3311	PACKING CASE	1	NV-G21EO(BLACK)
406(5)		VPG3312	PACKING CASE	1	NV-G21EO(SILVER)
406(5)		VPG3313	PACKING CASE	1	NV-G21EV(BLACK)
406(5)		VPG3314	PACKING CASE	1	NV-G21EV(SILVER)
408(5)		VJA0391	AC CORD	1	NV-G21EG <!>
408(5)		VJA0389	AC CORD	1	NV-G21B <!>
408(5)		VJA0388	AC CORD	1	NV-G21EO/EV <!>
409(5)		VEQ0549	DIGITAL SCANNER	1	NV-G21EG/EO/EV
409(5)		VEQ0540	DIGITAL SCANNER	1	NV-G21B
410(5)		VQC1010	PROGRAMME SHEET	1	NV-G21EG/EO/EV
410(5)		VQC1009	PROGRAMME SHEET	1	NV-G21B
411(5)		VQT2237	OPERATING INSTRUCTIONS	1	NV-G21EG/EO/EV <!>
			(DIGITAL SCANNER)		
411(5)		VQT2238	OPERATING INSTRUCTIONS	1	NV-G21B <!>
			(DIGITAL SCANNER)		
412(5)		VPK0688	ACCESSORIES PACKING CASE	1	
413(5)		VPN1822	ACCESSORIES CUSHION	1	
450(6)		VYK1589	TOP CASE UNIT	1	NV-G21EG/EO/EV
450(6)		VYK1596	TOP CASE UNIT	1	NV-G21B
451(6)		VKM0843	BOTTOM CASE	1	
452(6)		VKF0824	BATTERY COVER	1	
453(6)		VKW0758	IR WINDOW	1	
454(6)		VSP0246	RUBBER CONTACT	1	NV-G21EG/EO/EV
454(6)		VSP0267	RUBBER CONTACT	1	NV-G21B
455(6)		VGU3406	POWER BUTTON	1	
456(6)		VGU3407	REC BUTTON (RED)	1	
457(6)		VGU3408	REC BUTTON (BLACK)	1	
458(6)		VGU3403	STILL BUTTON	1	
459(6)		VGU3410	STOP BUTTON	1	
460(6)		VGU3404	STILL ADV BUTTON	1	
461(6)		VGU3412	REW BUTTON	1	
462(6)		VGU3409	PLAY BUTTON	1	
463(6)		VGU3411	FF BUTTON	1	
464(6)		VJR0229	ELECTRODE (COMMON)	1	
465(6)		VGU2274	CH BUTTON	4	
466(6)		VGU3628	TIMER REC BUTTON	1	
470(7)		VYK1628	CASE UNIT	1	NV-G21EG/EO/EV
470(7)		VYK1626	CASE UNIT	1	NV-G21B
471(7)		VGU3710	TRANSM1SSON BUTTON	1	
472(7)		VGU3709	POWER SW KNOB	1	
473(7)		VJR0270	ELECTRODE (A)	1	
474(7)		VJR0271	ELECTRODE (B)	1	
475(7)		VJR0272	ELECTRODE (C)	1	
476(7)		VKF0900	BATTERY COVER	1	
477(7)		VMB1691	SUPPRT ANGLE	1	
478(7)		VKW0772	SMOKE FILTER	1	
479(7)		VSQ0533	SENSOR UNIT	1	
			JIG		
		VFJ8125H3F	VHS-ALIGNMENT TAPE(PAL)	1	
		VFK0335	RETAINING RING REMOVER	1	
			(3mm/4mm)		
		VFK0387	TENSION POST ADJUSTMENT	1	
			PLATE		
		VFK0191	POST ADJUSTMENT PLATE	1	
		VFK0190	REEL TABLE HEIGHT GAUGE	1	
		VFK0328	H-POSITION ADJ.	1	
			SCREWDRIVER		
		VFK0329	POST ADJUSTMENT SCREWDRIVER	1	
		VFK62	FAN TYPE TENSION GAUGE	1	
		VFK0326	HEX WRENCH SET	1	
		VFK0132	BACK TENSION METER	1	
		VFK0343	CHECK LIGHT	1	
		VFK0344	HEIGHT ADJUSTMENT JIG	1	
		VFK27	HEAD CLEANING STICK	1	
		MOR265	MORLYTONE GREASE	1	
		VFK0283	SERVICE ALIGNMENT TOOL KIT	1	
		VFK0341	UPPER CYLINDER REMOVER	1	

www.freeservicemanuals.info

2.NV-G21EG/B/EO/EV Electrical Replacement Parts List

Note:1.* Be sure to make your orders of replacement parts according to this list.
2.IMPORTANT SAFETY NOTICE
Components identified with the mark <!> have the special characteristics for safety. When replacing any of these components,use only the same type.
3.Unless otherwise specified,
All resistors are in OHMS ,K=1,000 OHMS. All capacitors are in MICRO-FARADS(uf),P=uuF.
4.The P.C.Board units marked width'■'show below the main assembled parts.

Ref.No.		Part No.	Part Name & Description	Pcs	Remarks
		VEP03440A	MAIN C.B.A.	1	INCLUDING THE SERVO
			(SYSTEM COMTROL,SERVO,		PACK C.B.A.
			LUMINANCE & CHROMINANCE,		(VEP02266A),SUB
			AUDIO,POWER,DEMODULATOR,		SERVO (1) PACK C.B.A
			TUNER,INPUT SELECT,BUZZER)		(VEP02281A),SUB
					SERVO (2) PACK C.B.A
					(VEP02282A),
					LUMINANCE &
					CHROMINANCE PACK
					C.B.A.(VEP03381A),
					SECAM PACK C.B.A.
					(VEP03382A),INPUT
					SELECT PACK C.B.A.
					(VEP03430A),SUB INPUT
					SELECT PACK C.B.A.
					(VEP03431A),TV
					DEMODULATOR PACK
					C.B.A.(VEP07374A),
					TUNER ARU PACK
					C.B.A.(VEP07375A)
					BUZZER PACK C.B.A.
					(VEP00H50A)
					NV-G21EG<!><R>
		VEP03440C	MAIN C.B.A.	1	INCLUDING THE SERVO
			(SYSTEM COMTROL,SERVO,		PACK C.B.A.
			LUMINANCE & CHROMINANCE,		(VEP02266A),SUB
			AUDIO,POWER,DEMODULATOR,		SERVO (1) PACK C.B.A
			TUNER,INPUT SELECT,BUZZER)		(VEP02281A),SUB
					SERVO (2) PACK C.B.A
					(VEP02282A),
					LUMINANCE &
					CHROMINANCE PACK
					C.B.A.(VEP03381B),
					INPUT SELECT PACK
					C.B.A.(VEP03432A),
					TV DEMODULATOR PACK
					C.B.A. (VEP07376A),
					TUNER ARU PACK
					C.B.A.(VEP07373A)
					BUZZER PACK C.B.A.
					(VEP00H50A)
					NV-G21B<!><R>
		VEP03440B	MAIN C.B.A.	1	INCLUDING THE SERVO
			(SYSTEM COMTROL,SERVO,		PACK C.B.A.
			LUMINANCE & CHROMINANCE,		(VEP02266A),SUB
			AUDIO,POWER,DEMODULATOR,		SERVO (1) PACK C.B.A
			TUNER,INPUT SELECT,BUZZER)		(VEP02281A),SUB
					SERVO (2) PACK C.B.A
					(VEP02282A),
					LUMINANCE &
					CHROMINANCE PACK
					C.B.A.(VEP03381B),
					INPUT SELECT PACK
					C.B.A.(VEP03430B),
					SUB INPUT SELECT PACK
					C.B.A.(VEP03431B),
					TV DEMODULATOR PACK
					C.B.A.(VEP07374B),
					TUNER ARU PACK
					C.B.A.(VEP07375B),
					BUZZER PACK C.B.A.
					(VEP00H50A)
					NV-G21EO/EV<!><R>
		VEP02266A	SERVO PACK C.B.A.	1	INCLUDING THE SUB

Ref.No.		Part No.	Part Name & Description	Pcs	Remarks
					SERVO (1) PACK C.B.A.
					(VEP02281A), SUB
					SERVO (2) PACK C.B.A.
					(VEP02282A) PART
					LIST IS INCLUDED IN
					MAIN C.B.A.
					(VEP03440A/B/C)
		VEP02281A	SUB SERVO (1) PACK C.B.A.	1	PART LIST IS
					INCLUDED IN MAIN
					C.B.A.(VEP03440A/B/C)
		VEP02282A	SUB SERVO (2) PACK C.B.A.	1	PART LIST IS
					INCLUDED IN MAIN
					C.B.A.(VEP03440A/B/C)
		VEP03381A	LUMINANCE & CHROMINANC	1	INCLUDING THE SECAM
			PACK C.B.A.		PACK C.B.A.
					(VEP03382A), PART
					LIST IS INCLUDED IN
					MAIN C.B.A.
					(VEP03440A) NV-G21EG
		VEP03381B	LUMINANCE & CHROMINANC	1	PART LIST IS
			PACK C.B.A.		INCLUDED IN MAIN
					C.B.A.(VEP03440B/C)
					NV-G21B/EO/EV
		VEP03382A	SECAM PACK C.B.A.	1	PART LIST IS
					INCLUDED IN MAIN
					C.B.A.(VEP03440A)
					NV-G21EG
		VEP05097E	HEAD AMP PACK C.B.A.	1	
		VEP03430A	INPUT SELECT PACK C.B.A.	1	INCLUDING THE SUB
					INPUT SELECT PACK
					C.B.A.(VEP03431A)
					PART LIST IS
					INCLUDED IN MAIN
					C.B.A.(VEP03440A)
					NV-G21EG
		VEP03432A	INPUT SELECT PACK C.B.A.	1	PART LIST IS
					INCLUDED IN MAIN
					C.B.A.(VEP03440C)
					NV-G21B
		VEP03430B	INPUT SELECT PACK C.B.A.	1	INCLUDING THE SUB
					INPUT SELECT PACK
					C.B.A.(VEP03431B)
					PART LIST IS
					INCLUDED IN MAIN
					C.B.A.(VEP03440B)
					NV-G21EO/EV
		VEP03431A	SUB INPUT SELECT PACK	1	PART LIST IS
			C.B.A.		INCLUDED IN MAIN
					C.B.A.(VEP03440A)
					NV-G21EG
		VEP03431B	SUB INPUT SELECT PACK	1	PART LIST IS
			C.B.A.		INCLUDED IN MAIN
					C.B.A.(VEP03440B)
					NV-G21EO/EV
		VEP06409A	OPERATION C.B.A.	1	
		VEP07394A	TIMER C.B.A.	1	NV-G21EG
		VEP07394B	TIMER C.B.A.	1	NV-G21B
		VEP07394C	TIMER C.B.A.	1	NV-G21EO/EV
		VEP07374A	TV DEMODULATOR PACK C.B.A.	1	PART LIST IS

www.freeservicemanuals.info

Ref.No.		Part No.	Part Name & Description	Pcs	Remarks
					INCLUDED IN MAIN
					C.B.A.(VEP03440A)
					NV-G21EG
		VEP07376A	TV DEMODULATOR PACK C.B.A.	1	PART LIST IS
					INCLUDED IN MAIN
					C.B.A.(VEP03440C)
					NV-G21B
		VEP07374B	TV DEMODULATOR PACK C.B.A.	1	PART LIST IS
					INCLUDED IN MAIN
					C.B.A.(VEP03440B)
					NV-G21EO/EV
		VEP07375A	TUNER ARU PACK C.B.A.	1	PART LIST IS
					INCLUDED IN MAIN
					C.B.A.(VEP03440A)
					INCLUDING THE RF
					CONVERTER UNIT
					(ENC87956) NV-G21EG
		VEP07373A	TUNER ARU PACK C.B.A.	1	PART LIST IS
					INCLUDED IN MAIN
					C.B.A.(VEP03440C)
					INCLUDING THE RF
					CONVERTER UNIT
					(ENC87952) NV-G21B
		VEP07375B	TUNER ARU PACK C.B.A.	1	PART LIST IS
					INCLUDED IN MAIN
					C.B.A.(VEP03440B)
					INCLUDING THE RF
					CONVERTER UNIT
					(ENC87954),
					NV-G21EO/EV
		VEP07364A	MUTING C.B.A.	1	PART LIST IS
					INCLUDED IN MAIN
					C.B.A.(VEP03440A/B/C)
		VEP01264H	POWER C.B.A.	1	INCLUDING THE SUB
					POWER C.B.A.
					(VEP00H48A)
					NV-G21EG<!>
		VEP01264J	POWER C.B.A.	1	INCLUDING THE SUB
					POWER C.B.A.
					(VEP00H48A)
					NV-G21B/EO/EV <!>
		VEP00H48A	SUB POWER C.B.A.	1	PART LIST IS
					INCLUDED IN POWER
					C.B.A.(VEP01264H/J)
					<R>
		VEP07395A	CHANNEL SELECT C.B.A.	1	NV-G21EG
		VEP07395B	CHANNEL SELECT C.B.A.	1	NV-G21B
		VEP07395C	CHANNEL SELECT C.B.A.	1	NV-G21EO/EV
		VEP07368C	VPS C.B.A.	1	NV-G21EG/EV
		ENC87956	RF CONVERTER	1	NV-G21EG<!><R>
		ENC87952	RF CONVERTER	1	NV-G21B<!><R>
		ENC87954	RF CONVERTER	1	NV-G21EO/EV<!><R>
		VEP06380B	IR RECEIEVER C.B.A.	1	PART LIST IS
					INCLUDED IN TIMER
					C.B.A.(VEP07394A/B/C)
		VEP22066A	REMOTE CONTROL UNIT C.B.A.	1	

Ref.No.		Part No.	Part Name & Description	Pcs	Remarks
		VEP66019D	DIGITAL SCANNER C.B.A.	1	NV-G21/EG/EO/EV
		VEP66019E	DIGITAL SCANNER C.B.A.	1	NV-G21B
		VEP00H50A	BUZZER PACK C.B.A.	1	PART LIST IS
					INCLUDED IN MAIN
					C.B.A.(VEP03440A/B/C)
		VEP00H22A	CYLINDER DRIVE C.B.A.	1	
		VEP00H30A	MECHANISM CONNECTION C.B.A.	1	
		VEP00H31A	REEL SENSOR C.B.A.	1	
		VXA2689	LED C.B.A.	1	
		VEP00H34A	PHOTO TR(T) C.B.A.	1	
		VEP00H35A	PHOTO TR(S) C.B.A.	1	
	■	VEP03440A	MAIN C.B.A.		INCLUDING THE SERVO
			(SYSTEM COMTROL,SERVO,		PACK C.B.A.
			LUMINANCE & CHROMINANCE,		(VEP02266A),SUB
			AUDIO,POWER,DEMODULATOR,		SERVO (1) PACK C.B.A
			TUNER,INPUT SELECT,BUZZER)		(VEP02281A),SUB
					SERVO (2) PACK C.B.A
					(VEP02282A),
					LUMINANCE &
					CHROMINANCE PACK
					C.B.A.(VEP03381A),
					SECAM PACK C.B.A.
					(VEP03382A),INPUT
					SELECT PACK C.B.A.
					(VEP03430A),SUB INPUT
					SELECT PACK C.B.A.
					(VEP03431A),TV
					DEMODULATOR PACK
					C.B.A.(VEP07374A),
					TUNER ARU PACK
					C.B.A.(VEP07375A)
					BUZZER PACK C.B.A.
					(VEP00H50A)
					NV-G21EG<!><R>
	■	VEP03440C	MAIN C.B.A.		INCLUDING THE SERVO
			(SYSTEM COMTROL,SERVO,		PACK C.B.A.
			LUMINANCE & CHROMINANCE,		(VEP02266A),SUB
			AUDIO,POWER,DEMODULATOR,		SERVO (1) PACK C.B.A
			TUNER,INPUT SELECT,BUZZER)		(VEP02281A),SUB
					SERVO (2) PACK C.B.A
					(VEP02282A),
					LUMINANCE &
					CHROMINANCE PACK
					C.B.A.(VEP03381B),
					INPUT SELECT PACK
					C.B.A.(VEP03432A),
					TV DEMODULATOR PACK
					C.B.A. (VEP07376A),
					TUNER ARU PACK
					C.B.A.(VEP07373A)
					BUZZER PACK C.B.A.
					(VEP00H50A)
					NV-G21B<!><R>
	■	VEP03440B	MAIN C.B.A.		INCLUDING THE SERVO
			(SYSTEM COMTROL,SERVO,		PACK C.B.A.
			LUMINANCE & CHROMINANCE,		(VEP02266A),SUB
			AUDIO,POWER,DEMODULATOR,		SERVO (1) PACK C.B.A
			TUNER,INPUT SELECT,BUZZER)		(VEP02281A),SUB
					SERVO (2) PACK C.B.A
					(VEP02282A),
					LUMINANCE &

www.freeservicemanuals.info

Ref.No.		Part No.	Part Name & Description	Pcs	Remarks
					CHROMINANCE PACK
					C.B.A.(VEP03381B),
					INPUT SELECT PACK
					C.B.A.(VEP03430B),
					SUB INPUT SELECT PACK
					C.B.A.(VEP03431B),
					TV DEMODULATOR PACK
					C.B.A.(VEP07374B),
					TUNER ARU PACK
					C.B.A.(VEP07375B),
					BUZZER PACK C.B.A.
					(VEP00H50A)
					NV-G21EO/EV<!><R>
			CAPACITORS		
C202		ECEA1HKR47	ELECTROLYTIC 50V 0.47U	1	
C203		ECUX1H562KBN	CHIP 50V 5600P	1	
C204		ECEA1CKN100	ELECTROLYTIC 16V 10U	1	
C205		ECQV1H473JZ	MYLAR 50V 0.047U	1	
C206		ECEA1CK100	ELECTROLYTIC 16V 10U	1	
C207		ECEA1CK100	ELECTROLYTIC 16V 10U	1	
C208		ECEA1HKN010	ELECTROLYTIC 50V 1U	1	
C209		ECEA1HKN010	ELECTROLYTIC 50V 1U	1	
C210		ECEA0JK330	ELECTROLYTIC 6.3V 33U	1	
C212		ECQV1H104JZ	MYLAR 50V 0.1U	1	
C213		ECQV1H683JZ	MYLAR 50V 0.068U	1	
C214		ECUX1H102KBN	CHIP 50V 1000P	1	
C215		ECEA1HKNR33	ELECTROLYTIC 50V 0.33U	1	
C216		ECQV1H104JZ	MYLAR 50V 0.1U	1	
C217		ECEA1HKR47	ELECTROLYTIC 50V 0.47U	1	
C218		ECUX1H472KBN	CHIP 50V 4700P	1	
C219		ECQV1H334JZ	MYLAR 50V 0.33U	1	
C220		ECUX1H103ZFN	CHIP 50V 0.01U	1	
C221		ECQV1H104JZ	MYLAR 50V 0.1U	1	
C222		ECQB1H562JH	MYLAR 50V 5600P	1	
C223		ECQB1H223JH	MYLAR 50V 0.022U	1	
C224		ECEA0JK470	ELECTROLYTIC 6.3V 47U	1	
C225		ECEA0JK470	ELECTROLYTIC 6.3V 47U	1	
C226		ECUX1H102KBN	CHIP 50V 1000P	1	
C227		ECUX1H332KBN	CHIP 50V 3300P	1	
C229		ECQB1H272JH	MYLAR 50V 2700P	1	
C230		ECEA1CKN100	ELECTROLYTIC 16V 10U	1	
C231		ECEA1HK010	ELECTROLYTIC 50V 1U	1	
C232		ECEA1CK100	ELECTROLYTIC 16V 10U	1	
C234		ECUX1H102KBN	CHIP 50V 1000P	1	
C236		ECQB1H223JH	MYLAR 50V 0.022U	1	
C237		ECQB1H562JH	MYLAR 50V 5600P	1	
C238		ECEA0JK101	ELECTROLYTIC 6.3V 100U	1	
C239		ECEA0JK221	ELECTROLYTIC 6.3V 220U	1	
C240		ECEA16Z10	ELECTROLYTIC 16V 10U	1	
C241		ECEA0JK470	ELECTROLYTIC 6.3V 47U	1	
C242		ECUX1H103ZFN	CHIP 50V 0.01U	1	
C243		ECUX1H103ZFN	CHIP 50V 0.01U	1	
C244		ECEA1EK4R7	ELECTROLYTIC 25V 4.7U	1	
C245		ECUX1H562KBN	CHIP 50V 5600P	1	
C246		ECQV1H104JZ	MYLAR 50V 0.1U	1	
C247		ECEA1CK100	ELECTROLYTIC 16V 10U	1	
C248		ECUX1H102KBN	CHIP 50V 1000P	1	
C249		ECCF1H101JC	CERAMIC 50V 100P	1	
C250		ECCF1H271JC	CERAMIC 50V 270P	1	
C251		ECCF1H180JC	CERAMIC 50V 18P	1	
C252		ECEA0JK470	ELECTROLYTIC 6.3V 47U	1	
C253		ECKF1H103ZF	CERAMIC 50V 0.01U	1	
C254		VCYD1C473MR1	SEMICONDUCTOR 16V 0.047U	1	
C255		ECKF1H332KB	CERAMIC 50V 3300P	1	
C271		ECEA1CK100	ELECTROLYTIC 16V 10U	1	
C272		ECEA1EK3R3	ELECTROLYTIC 25V 3.3U	1	
C273		ECQB1H103JH	MYLAR 50V 0.01U	1	
C301		ECUX1H271KBN	CHIP 50V 270P	1	
C302		ECEA0JU331	ELECTROLYTIC 6.3V 330U	1	NV-G21EG
C303		ECUX1H103ZFN	CHIP 50V 0.01U	1	
C304		ECUX1H103ZFN	CHIP 50V 0.01U	1	
C305		ECEA1CK100	ELECTROLYTIC 16V 10U	1	NV-G21EG
C306		ECEA1CK100	ELECTROLYTIC 16V 10U	1	NV-G21EG

Ref.No.		Part No.	Part Name & Description	Pcs	Remarks
C307		ECEA1CK100	ELECTROLYTIC 16V 10U	1	NV-G21EG
C309		ECUX1H560JCN	CHIP 50V 56P	1	
C310		ECUX1H820JCN	CHIP 50V 82P	1	
C311		ECEA1CK100	ELECTROLYTIC 16V 10U	1	NV-G21EG
C312		ECEA1HK010	ELECTROLYTIC 50V 1U	1	NV-G21EG
C313		ECUX1H100DCN	CHIP 50V 10P	1	
C314		ECEA1EK4R7	ELECTROLYTIC 25V 4.7U	1	NV-G21EG
C315		ECEA1EKN2R2	ELECTROLYTIC 25V 2.2U	1	
C316		ECUX1H180JCN	CHIP 50V 18P	1	
C317		ECUX1H180JCN	CHIP 50V 18P	1	
C318		ECUX1H180JCN	CHIP 50V 18P	1	
C319		ECUX1H180JCN	CHIP 50V 18P	1	
C321		ECUX1H040CCN	CHIP 50V 4P	1	
C322		VCYD1C104MR1	SEMICONDUCTOR 16V 0.1U	1	NV-G21EG
C323		ECUX1H120JCN	CHIP 50V 12P	1	
C325		ECEA1CK100	ELECTROLYTIC 16V 10U	1	NV-G21EG
C326		ECEA1HK010	ELECTROLYTIC 50V 1U	1	NV-G21EG
C328		ECEA1HK0R1	ELECTROLYTIC 50V 0.1U	1	NV-G21EG
C330		ECUX1H220JCN	CHIP 50V 22P	1	
C331		ECEA1AK470	ELECTROLYTIC 10V 47U	1	NV-G21EG
C332		ECUX1H680JCN	CHIP 50V 68P	1	
C333		ECUX1H151JCN	CHIP 50V 150P	1	
C334		ECUX1H103ZFN	CHIP 50V 0.01U	1	
C335		ECEA1CK470	ELECTROLYTIC 16V 47U	1	
C336		ECUX1H470JCN	CHIP 50V 47P	1	
C337		ECUX1H100DCN	CHIP 50V 10P	1	
C701		ECEA1CK220	ELECTROLYTIC 16V 22U	1	NV-G21B/EO/EV
C702		ECEA1CK100	ELECTROLYTIC 16V 10U	1	
C703		ECEA1HK2R2	ELECTROLYTIC 50V 2.2U	1	NV-G21EG/EO/EV
C703		ECEA1HKN2R2	ELECTROLYTIC 50V 2.2U	1	NV-G21B
C706		ECQV1H873JZ	MYLAR 50V 0.083U	1	NV-G21B
C706		ECQB1H103JH	MYLAR 50V 0.01U	1	NV-G21EO/EV
C707		ECEA1HK010	ELECTROLYTIC 50V 1U	1	NV-G21EG/EO/EV
C707		ECEA1HKS010	ELECTROLYTIC 50V 1U	1	NV-G21B
C708		ECEA1CK470	ELECTROLYTIC 16V 47U	1	NV-G21EG/EO/EV
C709		ECEA1EK4R7	ELECTROLYTIC 25V 4.7U	1	NV-G21EG
C709		ECKF1H103ZF	CERAMIC 50V 0.01U	1	NV-G21EO/EV
C710		ECUX1H103ZF	CHIP 50V 0.01U	1	NV-G21B
C715		ECUX1H103ZF	CHIP 50V 0.01U	1	
C716		ECUX1H103ZF	CHIP 50V 0.01U	1	
C717		ECUX1H103ZF	CHIP 50V 0.01U	1	
C718		ECUX1H103ZF	CHIP 50V 0.01U	1	
C719		ECUX1H103ZF	CHIP 50V 0.01U	1	
C720		ECUX1H103ZF	CHIP 50V 0.01U	1	
C721		ECEA1HKR27	ELECTROLYTIC 50V 0.27U	1	
C722		ECUX1H103ZF	CHIP 50V 0.01U	1	
C723		ECUX1H150JC	CHIP 50V 15P	1	NV-G21EG/EO/EV
C723		ECUX1H120JC	CHIP 50V 12P	1	NV-G21B
C725		ECQV1H104JZ	MYLAR 50V 0.1U	1	
C727		ECUX1H080DCN	CHIP 50V 80P	1	NV-G21EG
C728		ECUX1H103ZF	CHIP 50V 0.01U	1	
C730		ECEA1CK100	ELECTROLYTIC 16V 10U	1	NV-G21EG/EO/EV
C730		ECEA1CKS100	ELECTROLYTIC 16V 10U	1	NV-G21B
C731		ECEA1CK100	ELECTROLYTIC 16V 10U	1	
C732		ECQV1H224JZ	MYLAR 50V 0.22U	1	
C734		ECUX1H103ZF	CHIP 50V 0.01U	1	
C735		ECUX1H070DCN	CHIP 50V 7P	1	
C736		ECQB1H103JH	MYLAR 50V 0.01U	1	NV-G21EG/EO/EV
C736		ECQB1H103KH	MYLAR 50V 0.01U	1	NV-G21B
C737		ECUX1H151JC	CHIP 50V 150P	1	
C739		ECEA1HK010	ELECTROLYTIC 50V 1U	1	
C740		ECUX1H103ZF	CHIP 50V 0.01U	1	
C741		ECEA1CK100	ELECTROLYTIC 16V 10U	1	
C742		ECUX1H030DCN	CHIP 50V 3P	1	NV-G21EG/EO/EV
C742		ECUX1H030CCN	CHIP 50V 3P	1	NV-G21B
C743		ECUX1H270JSN	CHIP 50V 27P	1	NV-G21EG/EO/EV
C743		ECUX1H270JPN	CHIP 50V 27P	1	NV-G21B
C744		ECEA1HKR47	ELECTROLYTIC 50V 0.47U	1	
C745		ECUX1H680JPN	CHIP 50V 68P	1	
C746		ECUX1H150JC	CHIP 50V 15P	1	
C747		ECUX1H103ZF	CHIP 50V 0.01U	1	
C748		ECEA1CK330	ELECTROLYTIC 16V 33U	1	
C749		ECEA1CK100	ELECTROLYTIC 16V 10U	1	
C760		ECQV1H473JZ	MYLAR 50V 0.047U	1	
C764		ECEA1EK4R7	ELECTROLYTIC 25V 4.7U	1	NV-G21EG

www.freeservicemanuals.info

Ref.No.		Part No.	Part Name & Description			Pcs	Remarks
C775		ECUX1H120JCN	CHIP	50V	12P	1	NV-G21EG
C781		ECUX1H390JCN	CHIP	50V	39P	1	NV-G21B
C782		ECEA1CK220	ELECTROLYTIC	16V	22U	1	NV-G21EG
C783		ECQV1H104JZ	MYLAR	50V	0.1U	1	NV-G21EG
C785		ECEA1EK4R7	ELECTROLYTIC	25V	4.7U	1	NV-G21EG
C785		ECEA1CK220	ELECTROLYTIC	16V	22U	1	NV-G21EO/EV
C786		ECQB1H183JH	MYLAR	50V	0.018U	1	
C801		ECUX1H391KBN	CHIP	50V	390P	1	
C802		ECQB1H223JH	MYLAR	50V	0.022U	1	
C803		ECUX1H103ZFN	CHIP	50V	0.01U	1	
C804		ECUX1H270JCN	CHIP	50V	27P	1	
C805		ECUX1H471KBN	CHIP	50V	470P	1	NV-G21EG
C806		ECEA1CK100	ELECTROLYTIC	16V	10U	1	NV-G21EG
C807		ECEA1HK2R2	ELECTROLYTIC	50V	2.2U	1	
C808		ECEA10Z100	ELECTROLYTIC	10V	10U	1	
C809		ECEA1AK470	ELECTROLYTIC	10V	47U	1	
C810		ECUX1H050CCN	CHIP	50V	5P	1	
C811		ECUX1H102KBN	CHIP	50V	1000P	1	NV-G21EG
C812		ECEA1AK470	ELECTROLYTIC	10V	47U	1	
C813		ECQV1H154JZ	MYLAR	50V	0.15U	1	
C814		ECUX1H103ZFN	CHIP	50V	0.01U	1	
C815		ECUX1H471KBN	CHIP	50V	470P	1	NV-G21EG
C816		ECEA1CK470	ELECTROLYTIC	16V	47U	1	
C817		ECUX1H103ZFN	CHIP	50V	0.01U	1	
C818		ECUX1H103ZFN	CHIP	50V	0.01U	1	
C819		ECUX1H103ZFN	CHIP	50V	0.01U	1	
C820		VCYD1C104MR1	SEMICONDUCTOR	16V	0.1U	1	
C821		VCYD1C104MR1	SEMICONDUCTOR	16V	0.1U	1	
C822		ECQV1H473JZ	MYLAR	50V	0.047U	1	NV-G21EG
C823		ECQV1H473JZ	MYLAR	50V	0.047U	1	NV-G21EG
C824		ECEA1HK010	ELECTROLYTIC	50V	1U	1	
C825		ECUX1H103ZFN	CHIP	50V	0.01U	1	NV-G21EG
C826		ECUX1H820JCN	CHIP	50V	82P	1	
C827		ECUX1H103ZFN	CHIP	50V	0.01U	1	NV-G21EG
C851		ECKF1H103ZF	CERAMIC	50V	0.01U	1	NV-G21EG
C852		ECEA1CK330	ELECTROLYTIC	16V	33U	1	NV-G21EG
C853		ECEA10Z47	ELECTROLYTIC	10V	47U	1	NV-G21EG
C854		ECQV1H563JZ	MYLAR	50V	0.056U	1	NV-G21EG
C855		ECEA1CK330	ELECTROLYTIC	16V	33U	1	NV-G21EG
C856		ECKF1H103ZF	CERAMIC	50V	0.01U	1	NV-G21EG
C857		ECKF1H103ZF	CERAMIC	50V	0.01U	1	NV-G21EG
C858		ECKF1H681KB	CERAMIC	50V	680P	1	NV-G21EG
C2001		ECQB1H333JH	MYLAR	50V	0.033U	1	
C2002		ECQB1H333JH	MYLAR	50V	0.033U	1	
C2003		ECQB1H333JH	MYLAR	50V	0.033U	1	
C2004		ECEA1HK2R2	ELECTROLYTIC	50V	2.2U	1	
C2005		ECEA1HK2R2	ELECTROLYTIC	50V	2.2U	1	
C2006		ECEA1HK2R2	ELECTROLYTIC	50V	2.2U	1	
C2007		ECQB1H223JH	MYLAR	50V	0.022U	1	
C2008		ECQV1H104JZ	MYLAR	50V	0.1U	1	
C2011		ECEA1CK101	ELECTROLYTIC	16V	100U	1	
C2012		ECUX1H332KBN	CHIP	50V	3300P	1	
C2013		ECUX1H332KBN	CHIP	50V	3300P	1	
C2014		ECUX1H332KBN	CHIP	50V	3300P	1	
C2016		ECEA25Z47	ELECTROLYTIC	25V	4.7U	1	
C2017		ECEA1CK470	ELECTROLYTIC	16V	47U	1	
C2018		ECQV1H104JZ	MYLAR	50V	0.1U	1	
C2019		ECQV1H104JZ	MYLAR	50V	0.1U	1	
C2020		ECQV1H104JZ	MYLAR	50V	0.1U	1	
C2021		ECQB1H223JH	MYLAR	50V	0.022U	1	
C2022		ECQV1H274JZ	MYLAR	50V	0.27U	1	
C2023		ECQV1H474JZ	MYLAR	50V	0.47U	1	
C2701		ECEA0JK470	ELECTROLYTIC	6.3V	47U	1	
C2702		ECQV1H224JZ	MYLAR	50V	0.22U	1	
C3001		ECEA1CK470	ELECTROLYTIC	16V	47U	1	
C3002		ECEA0JU471	ELECTROLYTIC	6.3V	470U	1	
C3003		ECUX1H220JCN	CHIP	50V	22P	1	
C3004		ECUX1H151JCN	CHIP	50V	150P	1	
C3005		ECUX1H681JN	CHIP	50V	680P	1	
C3006		ECUX1H220JCN	CHIP	50V	22P	1	
C3007		ECEA0JK470	ELECTROLYTIC	6.3V	47U	1	
C3008		ECQV1H104JZ	MYLAR	50V	0.1U	1	
C3012		ECUX1H150JCN	CHIP	50V	15P	1	
C3013		ECEA1HKN010	ELECTROLYTIC	50V	1U	1	
C3501		ECEA1CK100	ELECTROLYTIC	16V	10U	1	

Ref.No.		Part No.	Part Name & Description			Pcs	Remarks
C3502		ECEA1CK100	ELECTROLYTIC	16V	10U	1	
C3503		VCYD1E332KR	SEMICONDUCTOR	25V	3300P	1	
C3504		VCYD1E332KR	SEMICONDUCTOR	25V	3300P	1	
C3505		ECEA1CK100	ELECTROLYTIC	16V	10U	1	
C3506		ECKF1H221KB	CERAMIC	50V	220P	1	NV-G21EG/B
C3507		ECQB1H333JH	MYLAR	50V	0.033U	1	NV-G21EG/B
C3508		ECKF1H102KB	CERAMIC	50V	1000P	1	NV-G21EG/B
C3509		ECEA0JU331	ELECTROLYTIC	6.3V	330U	1	NV-G21EG
C3801		ECEA1CK220	ELECTROLYTIC	16V	22U	1	NV-G21EG/EO/EV
C3802		ECEA1CK220	ELECTROLYTIC	16V	22U	1	NV-G21EG/EO/EV
C3803		ECEA1CK470	ELECTROLYTIC	16V	47U	1	NV-G21EG/EO/EV
C3804		ECEA1HK2R2	ELECTROLYTIC	50V	2.2U	1	NV-G21EG/EO/EV
C3805		ECEA1CK470	ELECTROLYTIC	16V	47U	1	NV-G21EG/EO/EV
C3806		ECEA1CK470	ELECTROLYTIC	16V	47U	1	NV-G21EG/EO/EV
C3807		ECKF1H102KB	CERAMIC	50V	1000P	1	NV-G21EG/EO/EV
C3808		ECEA0JK470	ELECTROLYTIC	6.3V	47U	1	NV-G21EG/EO/EV
C3809		ECEA1HK2R2	ELECTROLYTIC	50V	2.2U	1	NV-G21EG/EO/EV
C3810		ECEA1HK3R3	ELECTROLYTIC	50V	3.3U	1	NV-G21EG/EO/EV
C3811		ECEA1HK2R2	ELECTROLYTIC	50V	2.2U	1	NV-G21EG/EO/EV
C3812		ECEA1CK330	ELECTROLYTIC	16V	33U	1	NV-G21EG/EO/EV
C3813		VCYD1C104MR1	SEMICONDUCTOR	16V	0.1U	1	NV-G21EG/EO/EV
C3814		ECEA1CK100	ELECTROLYTIC	16V	10U	1	NV-G21EG
C3815		ECEA1CK100	ELECTROLYTIC	16V	10U	1	NV-G21EG
C3816		ECKF1H121KB	CERAMIC	50V	120P	1	NV-G21EG
C3817		ECEA1HK010	ELECTROLYTIC	50V	1U	1	NV-G21EG
C3818		ECKF1H102KB	CERAMIC	50V	1000P	1	NV-G21EG
C3819		ECEA1HK010	ELECTROLYTIC	50V	1U	1	NV-G21EG
C3820		ECKF1H221KB	CERAMIC	50V	220P	1	NV-G21EG/EO/EV
C4002		ECUX1H102KBN	CHIP	50V	1000P	1	
C4003		ECEA1CK330	ELECTROLYTIC	16V	33U	1	
C4004		ECEA1HK010	ELECTROLYTIC	50V	1U	1	
C4005		ECEA1AK330	ELECTROLYTIC	10V	33U	1	
C4006		ECEA1CK100	ELECTROLYTIC	16V	10U	1	
C4007		ECEA1CKL100	ELECTROLYTIC	16V	10U	1	
C4008		ECUX1H471KBN	CHIP	50V	470P	1	
C4009		ECUX1H101KN	CHIP	50V	100P	1	
C4010		ECQB1H123JH	MYLAR	50V	0.012U	1	
C4011		ECEA1CKL100	ELECTROLYTIC	16V	10U	1	
C4012		ECEA1HK010	ELECTROLYTIC	50V	1U	1	
C4013		ECEA1AK220	ELECTROLYTIC	10V	22U	1	
C4014		ECEA1AK101	ELECTROLYTIC	10V	100U	1	
C4015		ECEA1CK100	ELECTROLYTIC	16V	10U	1	
C4016		ECEA1CK100	ELECTROLYTIC	16V	10U	1	
C4018		ECQB1H223JH	MYLAR	50V	0.022U	1	
C4019		ECQB1H333KH	MYLAR	50V	0.033U	1	NV-G21B
C4020		ECEA1CK100	ELECTROLYTIC	16V	10U	1	
C4021		ECUX1H102KBN	CHIP	50V	1000P	1	
C4022		ECQB1H103JH	MYLAR	50V	0.01U	1	
C4023		ECEA1CK470	ELECTROLYTIC	16V	47U	1	
C4024		ECQP1222JZ	MYLAR	100V	2200P	1	
C4025		ECEA1CKL100	ELECTROLYTIC	16V	10U	1	
C4026		ECCD2H121K	CERAMIC	500V	120P	1	
C6001		ECEA0JK220	ELECTROLYTIC	6.3V	22U	1	
C6007		ECQV1H104JZ	MYLAR	50V	0.1U	1	
C6011		ECUX1H103KBN	CHIP	50V	0.01U	1	
C6012		ECUX1H103KBN	CHIP	50V	0.01U	1	
C6014		ECUX1H221KN	CHIP	50V	220P	1	
C6017		ECEA0JK470	ELECTROLYTIC	6.3V	47U	1	
C6018		ECEA0JK470	ELECTROLYTIC	6.3V	47U	1	
C6019		ECEA0JK470	ELECTROLYTIC	6.3V	47U	1	
C6020		ECUX1H103KBN	CHIP	50V	0.01U	1	
C6022		ECEA0JK330	ELECTROLYTIC	6.3V	33U	1	
C6023		ECUX1H103KBN	CHIP	50V	0.01U	1	
C6024		ECEA1CK330	ELECTROLYTIC	16V	33U	1	
C6025		ECQV1H104JZ	MYLAR	50V	0.1U	1	
C6026		ECQB1H103JH	MYLAR	50V	0.01U	1	
C6027		ECUX1H271KBN	CHIP	50V	270P	1	
C6028		ECUX1H271KBN	CHIP	50V	270P	1	
C6029		ECUX1H271KBN	CHIP	50V	270P	1	
C6030		ECEA1CK101	ELECTROLYTIC	16V	100U	1	NV-G21EG/EO/EV
C7518		EECS5R5V473	GOLD	5.5V	0.047	1	
C7573		ECEA1HKN010	ELECTROLYTIC	50V	1U	1	
C7651		ECEA1CK100	ELECTROLYTIC	16V	10U	1	
C7652		ECEA1CKN330	ELECTROLYTIC	16V	33U	1	NV-G21EG/EO/EV
C7653		ECQB1H392JH	MYLAR	50V	3900P	1	

www.freeservicemanuals.info

Ref.No.		Part No.	Part Name & Description	Pcs	Remarks
C7654		ECQB1H103JH	MYLAR 50V 0.01U	1	
C7655		ECEA1HK010	ELECTROLYTIC 50V 1U	1	
C7656		ECEA1HK010	ELECTROLYTIC 50V 1U	1	
C7657		ECKF1H103ZF	CERAMIC 50V 0.01U	1	
C7658		ECQP1562JZ	MYLAR 100V 5600P	1	
C7659		ECQB1H272JH	MYLAR 50V 2700P	1	
C8001		ECUX1H103ZFN	CHIP 50V 0.01U	1	
C8002		ECUX1H103ZFN	CHIP 50V 0.01U	1	
D201		MA165	DIODE	1	
D202		MA165	DIODE	1	
D203		MA165	DIODE	1	
D204		MA156	DIODE	1	
D301		MA165	DIODE	1	
D302		MA165	DIODE	1	
D303		1SS283	DIODE	1	
D304		1SS283	DIODE	1	
D710		MA3100L	DIODE	1	
D712		MA27WA	DIODE	1	
D771		MA151WK	DIODE	1	NV-G21EG/EO/EV
D801		MA165	DIODE	1	
D802		MA165	DIODE	1	
D2007		MA165	DIODE	1	
D3001		MA165	DIODE	1	
D3002		MA165	DIODE	1	
D3004		ERA15-01V5	DIODE	1	
D3501		MA165	DIODE	1	
D3502		MA27W	DIODE	1	
D3801		MA165	DIODE	1	NV-G21EG/EO/EV
D6001		11ES1	DIODE	1	
D6002		MA165	DIODE	1	
D6005		MA165	DIODE	1	
D6009		MA165	DIODE	1	
D6010		MA165	DIODE	1	
D6011		MA165	DIODE	1	
D6012		MA165	DIODE	1	
D6017		11ES1	DIODE	1	
D6019		MA414OM	DIODE	1	
D6020		MA411OL	DIODE	1	
D6021		MA165	DIODE	1	
D6022		MA165	DIODE	1	
D6023		MA165	DIODE	1	
D6024		MA165	DIODE	1	
D6028		MA165	DIODE	1	
D6029		MA165	DIODE	1	
D6030		MA165	DIODE	1	
D6031		MA165	DIODE	1	
D6032		MA165	DIODE	1	NV-G21EG/EO/EV
D6033		MA165	DIODE	1	NV-G21EG/EO/EV
D7552		11ES1	DIODE	1	
D7555		MA27WB	DIODE	1	
D7556		MA165	DIODE	1	
D7574		LN28WPVT	LED	1	
DL301		EFDEN645A51F	DELAY LINE	1	
DL801		EFDHR124A13A	DELAY LINE	1	
FL301		ELB4M022	FILTER	1	
FL303		VLF0499	FILTER	1	
FL801		VLF0299	FILTER	1	
FL851		VLF0143	FILTER	1	NV-G21EG
FL3501		ELB4H020	FILTER	1	NV-G21EG/EO/EV
FL3501		VLF0413	FILTER	1	NV-G21B
FL4001		VLF0332	FILTER	1	
IC201		UPD6160CA605	IC	1	
IC202		MN15311VJC	IC	1	
IC203		UPC358C	IC	1	
IC301		VEFY017	IC	1	
IC701		M51366SP	IC	1	

Ref.No.		Part No.	Part Name & Description	Pcs	Remarks
IC801		VEFC013	FIC	1	
IC851		BA7025L	IC	1	NV-G21EG
IC2001		BA6430S	IC	1	
IC2702		UPC358C	IC	1	
IC3501		BA7004	IC	1	
IC3801		M5202P	IC	1	NV-G21EG/EO/EV
IC3802		AN6552	IC	1	NV-G21EG
IC4001		BA7752LS	IC	1	
IC6001		MN15362VJR	IC	1	
IC6002		UPC393C	IC	1	
IC6003		UPD4510BC	IC	1	
IC6004		MN1280	IC	1	
IC7651		AN5421	IC	1	
L202		VLQEL05F101K	COIL 100UH	1	
L301		VLQEL05F180K	COIL 18UH	1	
L302		VLQEL05F180K	COIL 18UH	1	
L303		VLQEL05F101K	COIL 100UH	1	
L304		VLQEL05F101K	COIL 100UH	1	
L305		VLQEL05F101K	COIL 100UH	1	
L306		VLQEL05F820K	COIL 82UH	1	
L307		VLQEL05F101K	COIL 100UH	1	
L310		VLQEL05F101K	COIL 100UH	1	
L311		VLQEL05F270K	COIL 27UH	1	
L701		VLQEL05F680K	COIL 68UH	1	NV-G21EG/EO/EV
L702		VLQEL05F680K	COIL 68UH	1	
L703		VLQEL05F221K	COIL 220UH	1	NV-G21EG
L704		VLQEL05F221K	COIL 220UH	1	NV-G21EG
L711		ELQF1R2KB	COIL 1.2UH	1	NV-G21B
L712		ELQF1R2KB	COIL 1.2UH	1	NV-G21EG
L712		ELQFR82XB	COIL 0.82UH	1	NV-G21B/EO/EV
L713		ELQFR56XB	COIL 0.56UH	1	NV-G21B/EO/EV
L714		ELQF1R2KB	COIL 1.2UH	1	
L715		VLQEL05F680K	COIL 68UH	1	NV-G21EG
L715		VLQEL05F680T	COIL 68UH	1	NV-G21B/EO/EV
L716		VLQEL05F560K	COIL 56UH	1	NV-G21EG
L717		VLQEL05F680K	COIL 68UH	1	
L718		VLQEL05F680K	COIL 68UH	1	NV-G21EG/EO/EV
L718		VLQEL05F330K	COIL 33UH	1	NV-G21B
L719		VLQEL05F120K	COIL 12UH	1	
L801		VLQEL05F150K	COIL 15UH	1	
L802		VLQEL05F470K	COIL 47UH	1	
L803		VLQEL05F270K	COIL 27UH	1	
L804		VLQEL05F151K	COIL 150UH	1	
L805		VLQEL05F101K	COIL 100UH	1	
L806		VLQEL05F470K	COIL 47UH	1	
L807		VLQEL05F331K	COIL 330UH	1	
L808		VLQEL05F681K	COIL 680UH	1	
L809		VLQEL05F681K	COIL 680UH	1	
L810		VLQEL05F101K	COIL 100UH	1	
L851		VLQEL05F101K	COIL 100UH	1	NV-G21EG
L2001		VLQEL05F102K	COIL 1000UH	1	
L3001		VLQEL05F101K	COIL 100UH	1	
L3002		VLQEL05F101K	COIL 100UH	1	
L3003		VLQEL05F101K	COIL 100UH	1	
L3004		VLQEL05F6R8J	COIL 6.8UH	1	
L3005		VLQEL05F120J	COIL 12UH	1	
L3501		VLQEL05F101K	COIL 100UH	1	
L3502		VLQEL05F101K	COIL 100UH	1	
L3503		VLQEL05F010K	COIL 1UH	1	NV-G21EG/B
L3504		VLQEL06F471K	COIL 470UH	1	NV-G21EG/EO/EV
L3505		VLQEL06F2R7K	COIL 2.7UH	1	NV-G21EG
L3801		VLQEL05F101K	COIL 100UH	1	
L4001		VLQEL07F822J	COIL 8200UH	1	
L4002		VLQEL05F471K	COIL 470UH	1	
L7551		VLQEL05F102K	COIL 1000UH	1	
L7552		VLQEL05F101K	COIL 100UH	1	
P001		VJS1232T	CONNECTOR (FEMALE)	1	
P006		VJS1902	CONNECTOR (FEMALE)	1	
P501		VJS1235T	CONNECTOR (FEMALE)	1	

www.freeservicemanuals.info

Ref.No.	Part No.	Part Name & Description	Pcs	Remarks
P502	VJS1233T	CONNECTOR (FEMALE)	1	
P1504	VJS1745	CONNECTOR (FEMALE)	1	
P2002	VJP1932T	CONNECTOR (MALE)	1	
P2002	VJS1932	CONNECTOR (FEMALE)	1	
P3003	VJP1258	CONNECTOR (MALE)	1	
P4001	VJP1233T	CONNECTOR(MALE) 6P	1	
P6002	VJS1935	CONNECTOR (FEMALE)	1	
P6004	VJS1467	CONNECTOR(FEMALE)	1	
P6005	VJS1917	CONNECTOR (FEMALE)	1	
P6201	VJS1236T	CONNECTOR (FEMALE)	1	
P7506	VJS1231R	CONNECTOR (FEMALE)	1	
P7507	VJS1230T	CONNECTOR (FEMALE)	1	
P7551	VJS1235T	CONNECTOR (FEMALE)	1	
P7552	VJS1233T	CONNECTOR (FEMALE)	1	
P7553	VJS1231T	CONNECTOR (FEMALE)	1	
P7554	VJS1231T	CONNECTOR (FEMALE)	1	
P7555	VJS1232T	CONNECTOR (FEMALE)	1	
P7556	VJS1233T	CONNECTOR (FEMALE)	1	
P7557	VJS1235T	CONNECTOR (FEMALE)	1	
P7801	VJS1234T	CONNECTOR (FEMALE)	1	NV-G21EG/EO/EV
P7802	VJS1231T	CONNECTOR (FEMALE)	1	NV-G21EG/EO/EV
PK201	VJR0189	CONNECTOR	1	
PK202	VJR0190	CONNECTOR	1	
PK203	VJR0190	CONNECTOR	1	
PK271	VJR0188	CONNECTOR	1	
PK3501	VJR0161	CONNECTOR	1	
PK3502	VJR0283	CONNECTOR	1	
PK3503	VJR0244	CONNECTOR	1	
PK3504	VJR0244	CONNECTOR	1	
PK7501	VJR0244	CONNECTOR	1	NV-G21EG/EO/EV
Q201	2SD636	TRANSISTOR	1	
Q202	2SD636	TRANSISTOR	1	
Q203	2SB641	TRANSISTOR	1	
Q204	2SB641	TRANSISTOR	1	
Q205	2SB641	TRANSISTOR	1	
Q206	2SB641	TRANSISTOR	1	
Q207	2SC2206	TRANSISTOR	1	(B,C)
Q208	2SD636	TRANSISTOR	1	
Q271	2SD636	TRANSISTOR	1	
Q272	2SD636	TRANSISTOR	1	
Q273	2SD636	TRANSISTOR	1	
Q274	2SD636	TRANSISTOR	1	
Q301	2SD601	TRANSISTOR CHIP	1	
Q302	2SB709	TRANSISTOR CHIP	1	
Q303	2SB709	TRANSISTOR CHIP	1	
Q304	2SD601	TRANSISTOR CHIP	1	
Q305	2SB709	TRANSISTOR CHIP	1	
Q306	2SD601	TRANSISTOR CHIP	1	
Q307	2SC2295	TRANSISTOR	1	
Q308	2SB709	TRANSISTOR CHIP	1	
Q703	2SD601	TRANSISTOR CHIP	1	(S,T)
Q710	2SC2377	TRANSISTOR	1	(C) NV-G21EG/EO/EV
Q710	2SC1047	TRANSISTOR	1	(C,D) NV-G21B
Q712	2SC1317	TRANSISTOR	1	NV-G21EG/EO/EV
Q712	2SD638	TRANSISTOR	1	NV-G21B
Q713	2SD1328	TRANSISTOR CHIP	1	(S,T)
Q714	2SD601	TRANSISTOR CHIP	1	
Q761	2SD601	TRANSISTOR CHIP	1	NV-G21B
Q771	2SD601	TRANSISTOR CHIP	1	NV-G21EG
Q772	2SK198	TRANSISTOR CHIP	1	(Q,R,S) NV-G21EG
Q773	2SK198	TRANSISTOR CHIP	1	NV-G21EG
Q801	2SC2295	TRANSISTOR	1	
Q802	2SD601	TRANSISTOR CHIP	1	
Q803	2SD601	TRANSISTOR CHIP	1	
Q804	2SC2295	TRANSISTOR	1	
Q805	2SD601	TRANSISTOR CHIP	1	
Q806	2SC2295	TRANSISTOR	1	
Q851	2SC2206	TRANSISTOR	1	NV-G21EG
Q2001	2SB641	TRANSISTOR	1	
Q2002	2SD636	TRANSISTOR	1	
Q3001	2SB641	TRANSISTOR	1	
Q3002	2SB641	TRANSISTOR	1	

Ref.No.	Part No.	Part Name & Description	Pcs	Remarks
Q3003	2SC2206	TRANSISTOR	1	
Q3501	2SC2206	TRANSISTOR	1	
Q3502	2SB641	TRANSISTOR	1	NV-G21EG
Q3801	2SB641	TRANSISTOR	1	(Q,R,S) NV-G21EG
Q4001	2SD639	TRANSISTOR	1	(R)
Q4002	2SD637	TRANSISTOR	1	
Q4003	2SD637	TRANSISTOR	1	
Q4004	2SB642	TRANSISTOR	1	(Q,R,S)
Q6006	2SB643	TRANSISTOR	1	
Q6007	2SB790	TRANSISTOR	1	(Q,R,S)
Q6009	2SB790	TRANSISTOR	1	(Q,R,S)
Q6016	2SD1275	TRANSISTOR	1	
Q6017	2SD893	TRANSISTOR	1	
Q6018	2SD973	TRANSISTOR	1	
Q6019	2SD638	TRANSISTOR	1	
Q6020	2SC1384	TRANSISTOR	1	(S) NV-G21EG/EO/EV
Q6021	2SC1384	TRANSISTOR	1	(S) NV-G21EG/EO/EV
Q7551	2SB644	TRANSISTOR	1	
Q7552	2SB644	TRANSISTOR	1	
Q7553	2SC3311	TRANSISTOR	1	
Q8001	2SD636	TRANSISTOR	1	
QR201	UN1113	TRANSISTOR-RESISTOR	1	
QR202	UN1113	TRANSISTOR-RESISTOR	1	
QR203	UN1212	TRANSISTOR-RESISTOR	1	
QR301	UN2213	TRANSISTOR-RESISTOR	1	
QR701	UN2213	TRANSISTOR-RESISTOR	1	
QR702	UN2213	TRANSISTOR-RESISTOR	1	
QR711	UN2212	TRANSISTOR-RESISTOR	1	NV-G21EG
QR712	UN2212	TRANSISTOR-RESISTOR	1	NV-G21EG
QR713	UN2211	TRANSISTOR-RESISTOR	1	NV-G21EG/EO/EV
QR714	UN2211	TRANSISTOR-RESISTOR	1	NV-G21EG/EO/EV
QR851	DTC144EA	TRANSISTOR RESISTOR	1	OR UN1213
QR852	DTC144EA	TRANSISTOR RESISTOR	1	OR UN1213 NV-G21EG
QR853	DTC144EA	TRANSISTOR RESISTOR	1	OR UN1213 NV-G21EG
QR2002	UN1212	TRANSISTOR-RESISTOR	1	
QR2003	UN1213	TRANSISTOR-RESISTOR	1	
QR3001	UN1111	TRANSISTOR-RESISTOR	1	
QR3002	UN1213	TRANSISTOR-RESISTOR	1	NV-G21EG/EO/EV
QR3003	UN1212	TRANSISTOR-RESISTOR	1	
QR3004	UN1213	TRANSISTOR-RESISTOR	1	
QR6001	UN1212	TRANSISTOR-RESISTOR	1	
QR6002	UN1211	TRANSISTOR-RESISTOR	1	NV-G21EG/EO/EV
QR6004	UN1213	TRANSISTOR-RESISTOR	1	
QR6005	UN1213	TRANSISTOR-RESISTOR	1	
QR6006	UN1111	TRANSISTOR-RESISTOR	1	
QR6008	UN1111	TRANSISTOR-RESISTOR	1	
QR6011	UN1212	TRANSISTOR-RESISTOR	1	
QR6012	DTA144EA	TRANSISTOR RESISTOR	1	
QR6013	UN1213	TRANSISTOR-RESISTOR	1	
QR6014	UN1211	TRANSISTOR-RESISTOR	1	
		RESISTORS		
R201	ERJ6GMYJ393	CHIP 1/16W 39K	1	
R202	ERJ6GMYJ152	CHIP 1/16W 1.5K	1	
R203	ERJ6GMYJ103	CHIP 1/16W 10K	1	
R204	ERJ6GMYJ221	CHIP 1/16W 220	1	
R205	ERJ6GMYJ102	CHIP 1/16W 1K	1	
R206	ERJ6GMYJ392	CHIP 1/16W 3.9K	1	
R207	ERJ6GMYJ473	CHIP 1/16W 47K	1	
R208	ERJ6GMYJ222	CHIP 1/16W 2.2K	1	
R209	ERJ6GMYJ682	CHIP 1/16W 6.8K	1	
R210	ERJ6GMYJ274	CHIP 1/16W 270K	1	
R211	ERJ6GMYJ563	CHIP 1/16W 56K	1	
R212	ERJ6GMYJ154	CHIP 1/16W 150K	1	
R213	ERJ6GMYJ154	CHIP 1/16W 150K	1	
R214	ERJ6GMYJ224	CHIP 1/16W 220K	1	
R215	ERJ6GMYJ272	CHIP 1/16W 2.7K	1	
R216	ERJ6GMYJ103	CHIP 1/16W 10K	1	
R217	ERJ6GMYJ683	CHIP 1/16W 68K	1	
R218	ERJ6GMYJ333	CHIP 1/16W 33K	1	
R219	ERJ6GMYJ333	CHIP 1/16W 33K	1	
R220	ERJ6GMYJ274	CHIP 1/16W 270K	1	
R222	ERJ6GMYJ332	CHIP 1/16W 3.3K	1	

www.freeservicemanuals.info

Ref.No.	Part No.	Part Name & Description	Pcs	Remarks
R223	ERJ6GMYJ332	CHIP 1/16W 3.3K	1	
R224	ERJ6GMYJ561	CHIP 1/16W 560	1	
R225	ERJ6GMYJ222	CHIP 1/16W 2.2K	1	
R226	ERJ6GMYJ102	CHIP 1/16W 1K	1	
R227	ERJ6GMYJ103	CHIP 1/16W 10K	1	
R228	ERJ6GMYJ393	CHIP 1/16W 39K	1	
R229	ERJ6GMYJ221	CHIP 1/16W 220	1	
R230	ERJ6GMYJ152	CHIP 1/16W 1.5K	1	
R231	ERJ6GMYJ152	CHIP 1/16W 1.5K	1	
R232	ERJ6GMYJ563	CHIP 1/16W 56K	1	
R233	ERJ6GMYJ563	CHIP 1/16W 56K	1	
R234	ERJ6GMYJ472	CHIP 1/16W 4.7K	1	
R235	ERJ6GMYJ333	CHIP 1/16W 33K	1	
R236	ERJ6GMYJ154	CHIP 1/16W 150K	1	
R237	ERJ6GMYJ154	CHIP 1/16W 150K	1	
R238	ERJ6GMYJ124	CHIP 1/16W 120K	1	
R239	ERJ6GMYJ392	CHIP 1/16W 3.9K	1	
R240	ERJ6GMYG333	CHIP 1/16W 33K	1	
R241	ERJ6GMYJ680	CHIP 1/16W 680K	1	
R242	ERJ6GMYJ154	CHIP 1/16W 150K	1	
R243	ERJ6GMYJ683	CHIP 1/16W 68K	1	
R244	ERJ6GMYJ223	CHIP 1/16W 22K	1	
R245	ERJ6GMYJ223	CHIP 1/16W 22K	1	
R246	ERJ6GMYJ103	CHIP 1/16W 10K	1	
R247	ERJ6GMYJ392	CHIP 1/16W 3.9K	1	
R248	ERJ6GMYJ223	CHIP 1/16W 22K	1	
R249	ERJ6GMYG472	CHIP 1/16W 4.7K	1	
R250	ERJ6GMYJ821	CHIP 1/16W 820	1	
R251	ERJ6GMYJ824	CHIP 1/16W 820K	1	
R252	ERJ6GMYJ473	CHIP 1/16W 47K	1	
R253	ERDS2TJ684	CARBON 1/4W 680K	1	
R256	ERJ6GMYJ123	CHIP 1/16W 12K	1	
R257	ERJ6GMYJ562	CHIP 1/16W 5.6K	1	
R258	ERJ6GMYJ683	CHIP 1/16W 68K	1	
R259	ERJ6GMYJ223	CHIP 1/16W 22K	1	
R260	ERJ6GMYJ223	CHIP 1/16W 22K	1	
R261	ERJ6GMYJ183	CHIP 1/16W 18K	1	
R262	ERDS2TJ682	CARBON 1/4W 6.8K	1	
R263	ERDS2TJ561	CARBON 1/4W 560	1	
R264	ERDS2TJ333	CARBON 1/4W 33K	1	
R265	ERDS2TJ103	CARBON 1/4W 10K	1	
R266	ERJ6GMYJ563	CHIP 1/16W 56K	1	
R267	ERJ6GMYJ563	CHIP 1/16W 56K	1	
R268	ERJ6GMYJ562	CHIP 1/16W 5.6K	1	
R269	ERJ6GMYJ272	CHIP 1/16W 2.7K	1	
R271	ERDS2TJ222	CARBON 1/4W 2.2K	1	
R272	ERDS2TJ154	CARBON 1/4W 150K	1	
R273	ERDS2TJ153	CARBON 1/4W 15K	1	
R274	ERDS2TJ154	CARBON 1/4W 150K	1	
R275	ERDS2TJ102	CARBON 1/4W 1K	1	
R276	ERDS2TJ273	CARBON 1/4W 27K	1	
R277	ERDS2TJ681	CARBON 1/4W 680	1	
R278	ERDS2TJ104	CARBON 1/4W 100K	1	
R279	ERDS2TJ683	CARBON 1/4W 68K	1	
R301	ERJ6GMYJ103	CHIP 1/16W 10K	1	
R302	ERJ6GMYJ102	CHIP 1/16W 1K	1	
R303	ERJ6GMYJ152	CHIP 1/16W 1.5K	1	
R304	ERJ6GMYJ102	CHIP 1/16W 1K	1	
R305	ERJ6GMYJ824	CHIP 1/16W 820K	1	
R306	ERJ6GMYJ151	CHIP 1/16W 150	1	
R307	ERJ6GMYJ222	CHIP 1/16W 2.2K	1	
R308	ERJ6GMYJ332	CHIP 1/16W 3.3K	1	
R309	ERJ6GMYJ680	CHIP 1/16W 680K	1	
R310	ERJ6GMYJ561	CHIP 1/16W 560	1	
R312	ERJ6GMYJ103	CHIP 1/16W 10K	1	
R313	ERJ6GMYJ393	CHIP 1/16W 39K	1	
R314	ERJ6GMYJ471	CHIP 1/16W 470	1	
R315	ERJ6GMYJ103	CHIP 1/16W 10K	1	
R316	ERJ6GMYJ471	CHIP 1/16W 470	1	
R317	ERJ6GMYJ471	CHIP 1/16W 470	1	
R318	ERJ6GMYJ471	CHIP 1/16W 470	1	
R319	ERJ6GMYJ182	CHIP 1/16W 1.8K	1	
R320	ERJ6GMYJ560	CHIP 1/16W 56	1	
R321	ERJ6GMYJ102	CHIP 1/16W 1K	1	
R322	ERJ6GMYJ823	CHIP 1/16W 82K	1	

Ref.No.	Part No.	Part Name & Description	Pcs	Remarks
R323	ERJ6GMYJ333	CHIP 1/16W 33K	1	
R324	ERJ6GMYJ102	CHIP 1/16W 1K	1	
R325	ERJ6GMYJ681	CHIP 1/16W 680	1	
R326	ERJ6GMYJ183	CHIP 1/16W 18K	1	
R327	ERJ6GMYJ123	CHIP 1/16W 12K	1	
R328	ERJ6GMYJ151	CHIP 1/16W 150	1	
R329	ERJ6GMYJ333	CHIP 1/16W 33K	1	
R350	ERJ6GMYJ102	CHIP 1/16W 1K	1	
R351	ERJ6GMYJ823	CHIP 1/16W 82K	1	
R352	ERJ6GMYJ272	CHIP 1/16W 2.7K	1	
R707	ERDS2TJ223	CARBON 1/4W 22K	1	NV-G21EG
R707	ERDS2TJ103	CARBON 1/4W 10K	1	NV-G21B/EO/EV
R712	ERJ6GEYJ682	CHIP 1/16W 6.8K	1	
R713	ERJ6GEYJ681	CHIP 1/16W 680	1	NV-G21EG/EO/EV
R714	ERD2FCG330	CARBON 2W 33	1	<!>
R715	ERJ6GEYJ561	CHIP 1/16W 560	1	NV-G21EG
R715	ERJ6GEYJ271	CHIP 1/16W 270	1	NV-G21B/EO/EV
R716	ERJ6GEYJ152	CHIP 1/16W 1.5K	1	NV-G21EG/EO/EV
R716	ERJ6GEYJ272	CHIP 1/16W 2.7K	1	NV-G21B
R717	ERJ6GEYJ332	CHIP 1/16W 3.3K	1	
R718	ERJ6GEYJ754	CHIP 1/16W 750K	1	
R719	ERJ6GEYJ682	CHIP 1/16W 6.8K	1	
R720	ERJ6GEYJ822	CHIP 1/16W 8.2K	1	
R721	ERJ6GEYJ332	CHIP 1/16W 3.3K	1	NV-G21EG
R722	ERJ6GEYJ392	CHIP 1/16W 3.9K	1	NV-G21EG/EO/EV
R723	ERJ6GEYJ183	CHIP 1/16W 18K	1	NV-G21EG/EO/EV
R723	ERJ6GEYJ104	CHIP 1/16W 100K	1	NV-G21B
R724	ERJ6GEYJ101	CHIP 1/16W 100	1	
R725	ERJ6GEYJ182	CHIP 1/16W 1.8K	1	
R726	ERJ6GEYJ472	CHIP 1/16W 4.7K	1	
R727	ERDS2TJ471	CARBON 1/4W 470	1	
R728	ERDS2TJ471	CARBON 1/4W 470	1	
R729	ERJ6GEYJ331	CHIP 1/16W 330	1	
R730	ERJ6GEYJ331	CHIP 1/16W 330	1	
R737	ERJ6GEYJ274	CHIP 1/16W 270K	1	NV-G21EG
R737	ERJ6GEYJ474	CHIP 1/16W 470K	1	NV-G21B/EO/EV
R738	ERJ6GEYJ334	CHIP 1/16W 330K	1	NV-G21EG
R738	ERJ6GEYJ394	CHIP 1/16W 390K	1	NV-G21B
R738	ERJ6GEYJ274	CHIP 1/16W 270K	1	NV-G21EO/EV
R739	ERDS2TJ681	CARBON 1/4W 680	1	
R740	ERJ6GEYJ473	CHIP 1/16W 47K	1	
R741	ERJ6GEYJ272	CHIP 1/16W 2.7K	1	
R742	ERJ6GEYJ272	CHIP 1/16W 2.7K	1	
R743	ERDS2TJ470	CARBON 1/4W 47	1	
R744	ERJ6GEYJ821	CHIP 1/16W 820	1	
R745	ERJ6GEYJ331	CHIP 1/16W 330	1	
R746	ERDS2TJ181	CARBON 1/4W 180	1	
R750	ERJ6GEYJ182	CHIP 1/16W 1.8K	1	
R757	ERJ6GEYJ222	CHIP 1/16W 2.2K	1	
R759	ERDS2TJ103	CARBON 1/4W 10K	1	
R760	ERJ6GEYJ102	CHIP 1/16W 1K	1	
R761	ERJ6GEYJ101	CHIP 1/16W 100	1	NV-G21B
R762	ERJ6GEYJ472	CHIP 1/16W 4.7K	1	NV-G21B
R763	ERJ6GEYJ103	CHIP 1/16W 10K	1	
R764	ERJ6GEYJ822	CHIP 1/16W 8.2K	1	
R772	ERJ6GEYJ102	CHIP 1/16W 1K	1	NV-G21EG
R773	ERJ6GEYJ103	CHIP 1/16W 10K	1	NV-G21EG
R774	ERDS2TJ333	CARBON 1/4W 33K	1	NV-G21EG
R775	ERJ6GEYJ334	CHIP 1/16W 330K	1	NV-G21EG
R776	ERJ6GEYJ105	CHIP 1/16W 1M	1	NV-G21EG
R777	ERJ6GEYJ184	CHIP 1/16W 180K	1	NV-G21EG
R778	ERJ6GEYJ105	CHIP 1/16W 1M	1	NV-G21EG
R779	ERJ6GEYJ104	CHIP 1/16W 100K	1	NV-G21EG
R781	ERJ6GEYJ681	CHIP 1/16W 680	1	NV-G21B
R782	ERJ6GEYJ471	CHIP 1/16W 470	1	NV-G21B
R792	ERJ6GEYJ120	CHIP 1/16W 12	1	
R801	ERJ6GMYJ102	CHIP 1/16W 1K	1	
R802	ERJ6GMYJ101	CHIP 1/16W 100	1	
R803	ERJ6GMYJ822	CHIP 1/16W 8.2K	1	
R804	ERJ6GMYJ562	CHIP 1/16W 5.6K	1	
R805	ERJ6GMYJ122	CHIP 1/16W 1.2K	1	
R806	ERJ6GMYJ271	CHIP 1/16W 270	1	
R807	ERJ6GMYJ272	CHIP 1/16W 2.7K	1	
R808	ERJ6GMYJ105	CHIP 1/16W 1M	1	
R809	ERJ6GMYJ103	CHIP 1/16W 10K	1	

www.freeservicemanuals.info

Ref.No.		Part No.	Part Name & Description			Pcs	Remarks
R810		ERJ6GMYJ332	CHIP	1/16W	3.3K	1	
R811		ERJ6GMYJ102	CHIP	1/16W	1K	1	
R812		ERJ6GMYJ471	CHIP	1/16W	470	1	
R813		ERJ6GMYJ104	CHIP	1/16W	100K	1	
R814		ERJ6GMYJ562	CHIP	1/16W	5.6K	1	
R815		ERJ6GMYJ562	CHIP	1/16W	5.6K	1	
R816		ERJ6GMYJ821	CHIP	1/16W	820	1	
R817		ERJ6GMYJ472	CHIP	1/16W	4.7K	1	
R818		ERJ6GMYJ273	CHIP	1/16W	27K	1	
R819		ERDS2TJ470	CARBON	1/4W	47	1	
R820		ERJ6GMYJ682	CHIP	1/16W	6.8K	1	
R821		ERJ6GMYJ822	CHIP	1/16W	8.2K	1	
R822		ERJ6GEYJ182	CHIP	1/16W	1.8K	1	
R823		ERJ6GMYJ152	CHIP	1/16W	1.5K	1	
R824		ERJ6GMYJ272	CHIP	1/16W	2.7K	1	
R825		ERJ6GMYJ562	CHIP	1/16W	5.6K	1	
R826		ERJ6GMYJ390	CHIP	1/16W	39	1	
R827		ERJ6GMYJ473	CHIP	1/16W	47K	1	
R828		ERJ6GMYJ472	CHIP	1/16W	4.7K	1	
R829		ERJ6GMYJ563	CHIP	1/16W	56K	1	
R830		ERJ6GMYJ563	CHIP	1/16W	56K	1	
R831		ERJ6GMYJ102	CHIP	1/16W	1K	1	
R832		ERJ6GMYJ271	CHIP	1/16W	270	1	
R833		ERJ6GMYJ471	CHIP	1/16W	470	1	
R834		ERJ6GMYJ393	CHIP	1/16W	39K	1	
R835		ERJ6GMYJ473	CHIP	1/16W	47K	1	
R836		ERJ6GMYJ332	CHIP	1/16W	3.3K	1	
R851		ERDS2TJ223	CARBON	1/4W	22K	1	NV-G21EG
R852		ERDS2TJ390	CARBON	1/4W	39	1	NV-G21EG
R853		ERDS2TJ154	CARBON	1/4W	150K	1	NV-G21EG
R854		ERDS2TJ222	CARBON	1/4W	2.2K	1	NV-G21EG
R855		ERDS2TJ102	CARBON	1/4W	1K	1	NV-G21EG
R856		ERDS2TJ103	CARBON	1/4W	10K	1	NV-G21EG
R857		ERDS2TJ472	CARBON	1/4W	4.7K	1	NV-G21EG
R858		ERDS2TJ221	CARBON	1/4W	220	1	NV-G21EG
R2001		ERDS2TJ560	CARBON	1/4W	56	1	
R2002		ERDS2TJ560	CARBON	1/4W	56	1	
R2003		ERDS2TJ560	CARBON	1/4W	56	1	
R2004		ERX12SJ1R0	METAL OXIDE	1/2W	1	1	
R2005		ERJ6GMYJ102	CHIP	1/16W	1K	1	
R2006		ERJ6GMYG512	CHIP	1/16W	5.1K	1	
R2007		ERJ6GMYJ472	CHIP	1/16W	4.7K	1	
R2008		ERJ6GMYJ682	CHIP	1/16W	6.8K	1	
R2009		ERJ6GMYJ472	CHIP	1/16W	4.7K	1	
R2010		ERJ6GMYJ223	CHIP	1/16W	22K	1	
R2018		ERJ6GMYJ330	CHIP	1/16W	33	1	
R2029		ERJ6GMYJ683	CHIP	1/16W	68K	1	
R2030		ERJ6GMYJ333	CHIP	1/16W	33K	1	
R2031		ERJ6GMYJ473	CHIP	1/16W	47K	1	
R2032		ERJ6GMYJ124	CHIP	1/16W	120K	1	
R2033		ERJ6GMYJ683	CHIP	1/16W	68K	1	
R2034		ERJ6GMYJ391	CHIP	1/16W	390	1	
R2710		ERDS2TJ472	CARBON	1/4W	4.7K	1	
R2711		ERDS2TJ105	CARBON	1/4W	1000K	1	
R2712		ERDS2TJ102	CARBON	1/4W	1K	1	
R2713		ERDS2TJ102	CARBON	1/4W	1K	1	
R2714		ERDS2TJ222	CARBON	1/4W	2.2K	1	
R2715		ERDS2TJ222	CARBON	1/4W	2.2K	1	
R2716		ERDS2TJ223	CARBON	1/4W	22K	1	
R3001		ERDS2TJ471	CARBON	1/4W	470	1	
R3002		ERJ6GMYJ750	CHIP	1/16W	75	1	
R3004		ERJ6GMYJ750	CHIP	1/16W	75	1	
R3005		ERJ6GMYJ272	CHIP	1/16W	2.7K	1	
R3006		ERJ6GMYJ102	CHIP	1/16W	1K	1	
R3008		ERJ6GMYJ561	CHIP	1/16W	560	1	
R3009		ERJ6GMYJ102	CHIP	1/16W	1K	1	
R3019		ERJ6GMYJ822	CHIP	1/16W	8.2K	1	
R3020		ERJ6GMYJ223	CHIP	1/16W	22K	1	
R3502		ERDS2TJ561	CARBON	1/4W	560	1	
R3503		ERDS2TJ152	CARBON	1/4W	1.5K	1	
R3504		ERDS2TJ152	CARBON	1/4W	1.5K	1	
R3505		ERDS2TJ392	CARBON	1/4W	3.9K	1	
R3506		ERDS2TJ102	CARBON	1/4W	1K	1	
R3507		ERDS2TJ750	CARBON	1/4W	75	1	
R3508		ERDS2TJ750	CARBON	1/4W	75	1	

Ref.No.		Part No.	Part Name & Description			Pcs	Remarks
R3509		ERDS2TJ333	CARBON	1/4W	33K	1	
R3510		ERDS2TJ183	CARBON	1/4W	18K	1	
R3511		ERDS2TJ750	CARBON	1/4W	75	1	NV-G21EO/EV
R3512		ERDS2TJ750	CARBON	1/4W	75	1	NV-G21EG
R3513		ERDS2TJ101	CARBON	1/4W	100	1	NV-G21EG
R3514		ERDS2TJ242	CARBON	1/4W	2.4K	1	NV-G21EG
R3516		ERDS2TJ242	CARBON	1/4W	2.4K	1	NV-G21EG
R3517		ERDS2TJ471	CARBON	1/4W	470	1	NV-G21EG
R3801		ERDS2TJ124	CARBON	1/4W	120K	1	NV-G21EG/EO/EV
R3802		ERDS2TJ124	CARBON	1/4W	120K	1	NV-G21EG/EO/EV
R3803		ERDS2TJ223	CARBON	1/4W	22K	1	NV-G21EG/EO/EV
R3804		ERDS2TJ222	CARBON	1/4W	2.2K	1	NV-G21EG/EO/EV
R3805		ERG1ANJ820	METAL OXIDE	1W	82	1	NV-G21EG/EO/EV
R3806		ERDS2TJ103	CARBON	1/4W	10K	1	NV-G21EG/EO/EV
R3807		ERDS2TJ473	CARBON	1/4W	47K	1	NV-G21EG
R3808		ERDS2TJ753	CARBON	1/4W	75K	1	NV-G21EG
R3809		ERDS2TJ183	CARBON	1/4W	18K	1	NV-G21EG
R3810		ERDS2TJ474	CARBON	1/4W	470K	1	NV-G21EG
R3811		ERDS2TJ474	CARBON	1/4W	470K	1	NV-G21EG
R3812		ERDS2TJ102	CARBON	1/4W	1K	1	NV-G21EG
R3813		ERDS2TJ471	CARBON	1/4W	470	1	NV-G21EG
R3814		ERDS2TJ750	CARBON	1/4W	75	1	NV-G21EG/EO/EV
R4001		ERJ6GMYJ100	CHIP	1/16W	10	1	
R4003		ERJ6GMYJ472	CHIP	1/16W	4.7K	1	
R4004		ERJ6GMYJ563	CHIP	1/16W	56K	1	
R4005		ERJ6GMYJ132	CHIP	1/16W	1.3K	1	
R4006		ERJ6GMYJ123	CHIP	1/16W	12K	1	
R4008		ERJ6GMYJ562	CHIP	1/16W	5.6K	1	
R4009		ERJ6GMYJ102	CHIP	1/16W	1K	1	
R4010		ERJ6GMYJ683	CHIP	1/16W	68K	1	
R4011		ERJ6GMYJ334	CHIP	1/16W	330K	1	
R4012		ERJ6GMYJ331	CHIP	1/16W	330	1	
R4013		ERJ6GMYJ103	CHIP	1/16W	10K	1	
R4015		ERJ6GMYJ105	CHIP	1/16W	1M	1	
R4016		ERJ6GMYJ562	CHIP	1/16W	5.6K	1	
R4017		ERDS2TJ223	CARBON	1/4W	22K	1	
R4018		ERDS2TJ122	CARBON	1/4W	1.2K	1	
R4019		ERJ6GMYJ472	CHIP	1/16W	4.7K	1	
R4020		ERJ6GMYJ163	CHIP	1/16W	16K	1	
R4021		ERJ6GMYJ470	CHIP	1/16W	47	1	
R4022		ERJ6GMYJ123	CHIP	1/16W	12K	1	
R4023		ERJ6GMYJ333	CHIP	1/16W	33K	1	
R4024		ERJ6GMYJ152	CHIP	1/16W	1.5K	1	
R4025		ERJ6GMYJ560	CHIP	1/16W	56	1	
R4027		ERJ6GMYJ511	CHIP	1/16W	510	1	
R4029		ERJ6GMYJ153	CHIP	1/16W	15K	1	
R4030		ERJ6GMYJ182	CHIP	1/16W	1.8K	1	
R6001		ERDS1TJ470	CARBON	1/2W	47	1	
R6006		ERD2FCVG220	CARBON	2W	22	1	<!>
R6007		ERJ6GMYJ122	CHIP	1/16W	1.2K	1	
R6008		ERJ6GMYJ181	CHIP	1/16W	180	1	
R6009		ERJ6GMYJ561	CHIP	1/16W	560	1	
R6009		ERJ6GMYJ561	CHIP	1/16W	560	1	
R6010		ERJ6GMYJ102	CHIP	1/16W	1K	1	
R6011		ERJ6GMYJ221	CHIP	1/16W	220	1	
R6016		ERJ6GMYJ223	CHIP	1/16W	22K	1	
R6017		ERJ6GMYJ473	CHIP	1/16W	47K	1	
R6019		ERJ6GMYJ153	CHIP	1/16W	15K	1	
R6022		ERJ6GMYJ223	CHIP	1/16W	22K	1	
R6023		ERJ6GMYJ683	CHIP	1/16W	68K	1	
R6024		ERJ6GMYJ223	CHIP	1/16W	22K	1	
R6025		ERJ6GMYJ824	CHIP	1/16W	820K	1	
R6026		ERJ6GMYJ105	CHIP	1/16W	1M	1	
R6027		ERJ6GMYJ223	CHIP	1/16W	22K	1	
R6028		ERJ6GMYJ184	CHIP	1/16W	180K	1	
R6029		ERJ6GMYJ561	CHIP	1/16W	560	1	
R6030		ERJ6GMYJ153	CHIP	1/16W	15K	1	
R6031		ERJ6GMYJ153	CHIP	1/16W	15K	1	
R6032		ERJ6GMYJ332	CHIP	1/16W	3.3K	1	
R6033		ERJ6GMYJ333	CHIP	1/16W	33K	1	
R6034		ERJ6GMYJ333	CHIP	1/16W	33K	1	
R6035		ERJ6GMYJ101	CHIP	1/16W	100	1	
R6036		ERJ6GMYJ101	CHIP	1/16W	100	1	
R6037		ERJ6GMYJ101	CHIP	1/16W	100	1	
R6038		ERJ6GMYJ272	CHIP	1/16W	2.7K	1	

www.freeservicemanuals.info

Ref.No.		Part No.	Part Name & Description	Pcs	Remarks
R6041		ERJ6GMYJ391	CHIP 1/16W 390	1	
R6045		ERJ6GMYJ562	CHIP 1/16W 5.6K	1	
R6046		ERJ6GMYJ152	CHIP 1/16W 1.5K	1	
R6050		ERJ6GMYJ562	CHIP 1/16W 5.6K	1	
R6051		ERJ6GMYJ332	CHIP 1/16W 3.3K	1	
R6068		ERDS2TJ332	CARBON 1/4W 3.3K	1	
R6069		ERJ6GMYJ103	CHIP 1/16W 10K	1	
R6070		ERJ6GMYJ471	CHIP 1/16W 470	1	
R6071		ERJ6GMYJ152	CHIP 1/16W 1.5K	1	
R6072		ERJ6GMYJ562	CHIP 1/16W 5.6K	1	
R6073		ERJ6GMYJ391	CHIP 1/16W 390	1	
R6074		ERJ6GMYJ561	CHIP 1/16W 560	1	
R6075		ERG2SJ180	METAL OXIDE 2W 18	1	
R6079		ERJ6GMYJ103	CHIP 1/16W 10K	1	
R6080		ERJ6GMYJ272	CHIP 1/16W 2.7K	1	
R6081		ERJ6GMYJ103	CHIP 1/16W 10K	1	
R6083		ERJ6GMYJ104	CHIP 1/16W 100K	1	
R6085		ERJ6GMYJ101	CHIP 1/16W 100	1	
R6087		ERJ6GMYJ103	CHIP 1/16W 10K	1	
R6088		ERJ6GMYJ223	CHIP 1/16W 22K	1	
R6089		ERJ6GMYJ473	CHIP 1/16W 47K	1	
R6090		ERJ6GMYJ104	CHIP 1/16W 100K	1	
R6093		ERJ6GMYJ103	CHIP 1/16W 10K	1	
R6094		ERJ6GMYJ272	CHIP 1/16W 2.7K	1	
R6095		ERJ6GMYJ272	CHIP 1/16W 2.7K	1	
R6096		ERJ6GMYJ272	CHIP 1/16W 2.7K	1	
R6097		ERJ6GMYJ152	CHIP 1/16W 1.5K	1	NV-G21EG/EO/EV
R6098		ERJ6GMYJ152	CHIP 1/16W 1.5K	1	NV-G21EG/EO/EV
R6099		ERDS2TJ103	CARBON 1/4W 10K	1	NV-G21EG/EO/EV
R7518		ERJ6GMYJ181	CHIP 1/16W 180	1	
R7552		ERJ6GMYJ332	CHIP 1/16W 3.3K	1	
R7572		ERJ6GMYJ473	CHIP 1/16W 47K	1	
R7573		ERJ6GMYJ820	CHIP 1/16W 82	1	
R7574		ERJ6GMYJ333	CHIP 1/16W 33K	1	
R7575		ERJ6GMYJ273	CHIP 1/16W 27K	1	
R7576		ERDS2TJ390	CARBON 1/4W 39	1	
R7577		ERJ6GMYJ332	CHIP 1/16W 3.3K	1	
R7578		ERDS2TJ103	CARBON 1/4W 10K	1	
R7579		ERDS2TJ103	CARBON 1/4W 10K	1	
R7596		ERJ6GMYJ103	CHIP 1/16W 10K	1	
R7651		ERJ6GEYJ103	CHIP 1/16W 10K	1	NV-G21EG
R7654		ERJ6GEYJ562	CHIP 1/16W 5.6K	1	NV-G21EG
R7655		ERDS2TJ472	CARBON 1/4W 4.7K	1	NV-G21EG/EO/EV
R7655		ERJ6GEYJ472	CHIP 1/16W 4.7K	1	NV-G21B
R7656		ERJ6GEYJ151	CHIP 1/16W 150	1	NV-G21EG
R7657		ERDS2TJ104	CARBON 1/4W 100K	1	
R7658		ERDS2TJ393	CARBON 1/4W 39K	1	
R7659		ERDS2TJ822	CARBON 1/4W 8.2K	1	
R7661		ERDS2TJ562	CARBON 1/4W 5.6K	1	
R7662		ERDS2TJ393	CARBON 1/4W 39K	1	
R7663		ERDS2TJ222	CARBON 1/4W 2.2K	1	
R7664		ERDS2TJ332	CARBON 1/4W 3.3K	1	
R8001		ERJ6GMYJ102	CHIP 1/16W 1K	1	
R8002		ERJ6GMYJ221	CHIP 1/16W 220	1	
R8003		ERJ6GMYJ821	CHIP 1/16W 820	1	
SW3501		VSS0152	SWITCH	1	
SW3502		ESD3228	SWITCH	1	NV-G21EG
T703		EIV5EC013A	TRANSFORMER	1	NV-G21EG/EO/EV
T703		EIV5EC005A	TRANSFORMER	1	NV-G21B
T704		EIV5EC006A	TRANSFORMER	1	NV-G21EG/EO/EV
T704		EIV5EC007A	TRANSFORMER	1	NV-G21B
T710		EULBEF022	FILTER	1	NV-G21EG
T711		EIS5EC004A	TRANSFORMER	1	NV-G21EG/EO/EV
T711		EIS5EC011A	TRANSFORMER	1	NV-G21B
T851		ELM7Q207A	COIL	1	NV-G21EG
T4001		EIQ7QF001B	IF TRANSFORMER	1	

Ref.No.		Part No.	Part Name & Description	Pcs	Remarks
VR301		EVND3AA00B22	VARIABLE 200	1	
VR701		EVND4AA00B23	VARIABLE 2K	1	NV-G21EG
VR701		EVM3ACA00B23	VARIABLE 2K	1	NV-G21B
VR701		EVN3AGA00B23	VARIABLE 2K	1	NV-G21EO/EV
VR702		EVM3AGA00B23	VARIABLE 2K	1	NV-G21EG
VR702		EVM3ACA00B23	VARIABLE 2K	1	NV-G21EO/EV
VR741		EVN38CA00B14	VARIABLE 10K	1	
VR751		EVN38CA00B53	VARIABLE 5K	1	
VR801		EVND1AA00B52	VARIABLE 500	1	
VR2001		EVND3AA00B54	VARIABLE 50K	1	
VR2002		EVND3AA00B15	VARIABLE 100K	1	
VR2010		EVL51MA00B25	VARIABLE 200K	1	
VR2011		EVND3AA00B15	VARIABLE 100K	1	
VR2013		EVN38CA00B23	VARIABLE 2K	1	
VR3012		EVND3AA00B22	VARIABLE 200	1	
VR4001		EVND3AA00B14	VARIABLE 10K	1	
VR4002		EVND3AA00B25	VARIABLE 200K	1	
VR7502		EVND3AA00B14	VARIABLE 10K	1	
VR7660		EVN38CA00B23	VARIABLE 2K	1	
X201		VSX0066	CRYSTAL OSCILLATOR	1	
X710		EFCH38MSP1	SAW FILTER	1	NV-G21EG/EO/EV
X710		EFCH36MSP1	SAW FILTER	1	NV-G21B
X711		EFCS5R5MW5	FILTER	1	NV-G21EG/EO/EV
X711		EFCS6R0MW5	FILTER	1	NV-G21B
X712		EFCS5R5MS5	FILTER	1	NV-G21EG/EO/EV
X712		EFCS6R0MS5	FILTER	1	NV-G21B
X715		ELB5A043	FILTER	1	NV-G21EG
X716		EFCA40R40M1	FILTER	1	NV-G21EG
X717		ELB5A048	TRANSFORMER	1	NV-G21EG
X801		VSX0162A	CRYSTAL OSCILLATOR	1	
X3501		VSX0099	CRYSTAL OSCILLATOR	1	
X6001		EF0FC3584A5	CRYSTAL OSCILLATOR	1	
X7504		EFBAA40D101	CRYSTAL OSCILLATOR	1	
			MISCELLANEOUS		
		VMC0075	HEAT SINK FIX SPRING	1	
		VSC1689	HEAT SINK	1	
		VSC1068	SHIELD CASE	1	
		VJF0004	WIRE SADLE	1	
		VWJ0271	FLAT CABLE (8P)	1	P6004-P7501
		VWJ05DW200MM	FLAT CABLE (5P)	1	P1503-P6002
		VJF0330	PURSE LOCK	1	
		VMZ0960	HEAT SINK BARRIER	1	
		VSC2048	SHIELD CASE	1	NV-G21EG/EO/EV
		VJF0215	BAIND	4	
		VEJ0546	REAR JACK	1	NV-G21EG
		VEJ0545	REAR JACK	1	NV-G21B
		VEJ0547	REAR JACK	1	NV-G21EO/EV
		VJF0236	INPUT SELECT PACK C.B.A.	2	NV-G21EG/EO/EV
			SUPPORTER		
		VKH0105	HOOK	1	NV-G21B
		XNG3BS	NUT	1	NV-G21B
		VJH0417	RF & ANT. BOARD	1	NV-G21EG
		VJH0418	RF & ANT. BOARD	1	NV-G21B/EO/EV
		VSC1788	SHIELD CASE (TOP)	1	
		VSC1789	SHIELD CASE (MAIN)	1	
		VSC1888	SHIELD CASE (BOTTOM)	1	
		TNV57470F1	TUNER	1	NV-G21EG
		TNV87452F2	TUNER	1	NV-G21B
		TNV57475F2	TUNER	1	NV-G21EO/EV
		VMP1040	DEMODU. SUPPORT ANGLE	1	
	■	VEP05097E	HEAD AMP C.B.A.		

www.freeservicemanuals.info

Ref.No.		Part No.	Part Name & Description	Pcs	Remarks
			CAPACITORS		
C501		ECUX1H103ZFN	CHIP 50V 0.01U	1	
C502		ECUX1H820JCN	CHIP 50V 82P	1	
C503		ECUX1H181KBN	CHIP 50V 180P	1	
C504		ECUX1H330JCN	CHIP 50V 33P	1	
C505		ECUX1H103ZFN	CHIP 50V 0.01U	1	
C506		ECUX1H473ZFN	CHIP 50V 0.047U	1	
C507		ECEA1CK100	ELECTROLYTIC 16V 10U	1	
C509		ECUX1H103ZFN	CHIP 50V 0.01U	1	
C510		ECUX1E104ZFN	CHIP 25V 0.1U	1	
C511		ECUX1E104ZFN	CHIP 25V 0.1U	1	
C512		ECUX1H103ZFN	CHIP 50V 0.01U	1	
C513		ECEA0JK220	ELECTROLYTIC 6.3V 22U	1	
C514		VCYD1C104MR1	SEMICONDUCTOR 16V 0.1U	1	
C515		ECUX1H102KBN	CHIP 50V 1000P	1	
C516		ECUX1H150JCN	CHIP 50V 15P	1	
C517		ECUX1H103ZFN	CHIP 50V 0.01U	1	
C518		ECEA1CK100	ELECTROLYTIC 16V 10U	1	
C519		ECEA1CK100	ELECTROLYTIC 16V 10U	1	
C520		ECUX1H150JCN	CHIP 50V 15P	1	
C521		ECUX1H103ZFN	CHIP 50V 0.01U	1	
C522		ECUX1H103ZFN	CHIP 50V 0.01U	1	
C523		ECUX1H150JCN	CHIP 50V 15P	1	
C524		ECEA1CK100	ELECTROLYTIC 16V 10U	1	
C525		ECUX1H102KBN	CHIP 50V 1000P	1	
C527		ECKF1H102KB	CERAMIC 50V 1000P	1	
C528		ECUX1H103ZFN	CHIP 50V 0.01U	1	
C529		ECUX1H103ZFN	CHIP 50V 0.01U	1	
C530		ECUX1H473ZFN	CHIP 50V 0.047U	1	
C531		ECEA0JK470	ELECTROLYTIC 6.3V 47U	1	
C533		ECUX1H560JCN	CHIP 50V 56P	1	
C534		ECEA1HK010	ELECTROLYTIC 50V 1U	1	
C537		ECUX1H150JCN	CHIP 50V 15P	1	
C538		ECEA1CK100	ELECTROLYTIC 16V 10U	1	
C539		ECUX1H103ZFN	CHIP 50V 0.01U	1	
IC501		AN3224K	IC	1	
IC502		AN3311S	IC	1	
L501		VLQEL05F101K	COIL 100UH	1	
L502		VLQEL05F820K	COIL 82UH	1	
L503		VLQEL05F151K	COIL 150UH	1	
L505		VLQEL05F101K	COIL 100UH	1	
L507		VLQEL05F270K	COIL 27UH	1	
P002		VJS1927	CONNECTOR (FEMALE)	1	
P501		VJP1248T	CONNECTOR(MALE) 8P	1	
P502		VJP1233T	CONNECTOR(MALE) 6P	1	
Q501		2SB709	TRANSISTOR CHIP	1	
			RESISTORS		
R501		ERJ6GMYJ561	CHIP 1/16W 560	1	
R502		ERJ6GMYJ102	CHIP 1/16W 1K	1	
R503		ERJ6GMYJ222	CHIP 1/16W 2.2K	1	
R504		ERJ6GMYJ331	CHIP 1/16W 330	1	
R506		ERJ6GMYJ471	CHIP 1/16W 470	1	
R508		ERJ6GMYJ100	CHIP 1/16W 10	1	
R509		ERJ6GMYJ100	CHIP 1/16W 10	1	
R510		ERJ6GMYJ561	CHIP 1/16W 560	1	
R511		ERJ6GMYJ821	CHIP 1/16W 820	1	
R512		ERJ6GMYJ821	CHIP 1/16W 820	1	
R515		ERJ6GMYJ102	CHIP 1/16W 1K	1	
R516		ERJ6GMYJ152	CHIP 1/16W 1.5K	1	
R517		ERJ6GMYJ391	CHIP 1/16W 390	1	

Ref.No.		Part No.	Part Name & Description	Pcs	Remarks
R522		ERJ6GMYJ561	CHIP 1/16W 560	1	
R524		ERJ6GMYJ334	CHIP 1/16W 330K	1	
VR501		EVND1AA00B23	VARIABLE 2K	1	
VR502		EVND1AA00B13	VARIABLE 1K	1	
			MISCELLANEOUS		
		VSC1832	SHIELD CASE (TOP)	1	
		VSC1833	SHIELD CASE (MAIN)	1	
		VSC1834	SHIELD CASE (BOTTOM)	1	
	■	VEP06409A	OPERATION C.B.A.		
D6201		LN81RCPHL	LED	1	
D6202		LN38GCPPSVT	LED	1	
D6203		MA165	DIODE	1	
P6201		VJP1249T	CONNECTOR(MALE) 9P	1	
P6202		VJS1952	CONNECTOR (FEMALE)	1	
			RESISTORS		
R6201		ERJ6GMYJ471	CHIP 1/16W 470	1	
R6202		ERJ6GMYJ181	CHIP 1/16W 180	1	
R6203		ERJ6GMYJ102	CHIP 1/16W 1K	1	
R6204		ERJ6GMYJ392	CHIP 1/16W 3.9K	1	
R6205		ERJ6GMYJ682	CHIP 1/16W 6.8K	1	
SW6201		EVQQS307K	SWITCH	1	
SW6202		EVQQS307K	SWITCH	1	
SW6203		ESD14314	SWITCH	1	
VR2007		EVUFSAEC4B15	VARIABLE 1M	1	
VR2008		EVUFSAEC4B15	VARIABLE 1M	1	
VR3004		EVUJ16EC4B24	VARIABLE 20K	1	
			MISCELLANEOUS		
		KL-04	LED SPACER	1	D6201
		VGU3364	SLIDE SWITCH KNOB	1	
		VMD0504	LED HOLDER	1	D6202
	■	VEP07394A	TIMER C.B.A.		INCLUDING IR RECIVER
					C.B.A.(VEP06380B)
					NV-G21EG
	■	VEP07394B	TIMER C.B.A.		INCLUDING IR RECIVER
					C.B.A.(VEP06380B)
					NV-G21B
	■	VEP07394C	TIMER C.B.A.		INCLUDING IR RECIVER
					C.B.A.(VEP06380B)

www.freeservicemanuals.info

Ref.No.		Part No.	Part Name & Description	Pcs	Remarks
			CAPACITORS		
C6701		ECEA0JK470	ELECTROLYTIC 6.3V 47U	1	
C6702		ECKF1H102KB	CERAMIC 50V 1000P	1	
C6703		ECEA1HK010	ELECTROLYTIC 50V 1U	1	
C6704		ECEA1HK3R3	ELECTROLYTIC 50V 3.3U	1	
C7501		ECUX1H080DCN	CHIP 50V 8P	1	
C7502		ECRHA030E41	TRIMER 30P	1	
C7503		ECEA1HKR22	ELECTROLYTIC 50V 0.22U	1	
C7504		ECUX1H220JCN	CHIP 50V 22P	1	
C7505		ECUX1H330JCN	CHIP 50V 33P	1	
C7506		ECEA0JKS101	ELECTROLYTIC 6.3V 100U	1	
C7510		ECEA1HK100	ELECTROLYTIC 50V 10U	1	
C7511		ECEA0JK221	ELECTROLYTIC 6.3V 220U	1	
C7512		ECQV1H104JZ	MYLAR 50V 0.1U	1	
C7514		ECUX1H103ZFN	CHIP 50V 0.01U	1	
C7515		ECEA0JK470	ELECTROLYTIC 6.3V 47U	1	
C7586		ECUX1H102KBN	CHIP 50V 1000P	1	
C7588		ECUX1H331KBN	CHIP 50V 330P	1	
D6701		PN323B	PHOTO DIODE	1	
D7501		11ES1	DIODE	1	
D7502		MA4075	DIODE	1	
D7503		MA165	DIODE	1	
D7520		MA165	DIODE	1	NV-G21EG/EO/EV
D7521		MA165	DIODE	1	NV-G21B
D7523		MA165	DIODE	1	NV-G21B
D7525		MA165	DIODE	1	
D7527		MA165	DIODE	1	NV-G21EG
D7528		MA165	DIODE	1	NV-G21EG/B
D7529		MA165	DIODE	1	
D7530		MA165	DIODE	1	NV-G21B
D7531		MA165	DIODE	1	NV-G21B
D7533		MA165	DIODE	1	
D7534		MA165	DIODE	1	
D7535		MA165	DIODE	1	
D7536		MA165	DIODE	1	
D7537		MA165	DIODE	1	
D7538		MA165	DIODE	1	
D7539		MA165	DIODE	1	
D7540		MA165	DIODE	1	
D7541		MA165	DIODE	1	
D7542		MA165	DIODE	1	
D7543		MA165	DIODE	1	NV-G21B
DP7501		VSL0101A	DISPLAY	1	
IC6701		UPC1490HA	IC	1	
IC7501		MN15283VJU	IC	1	
IC7502		MN1220	IC	1	
IC7504		MN1280P	IC	1	
L7501		VLQEL05F221K	COIL 220UH	1	
P7501		VJS1678	CONNECTOR (FEMALE)	1	
P7502		VJS1937	CONNECTOR (FEMALE)	1	
P7506		VJP1244T	CONNECTOR(MALE) 4P	1	NV-G21EG/EO/EV
P7507		VJP1243T	CONNECTOR(MALE) 3P	1	
Q7501		2SD637	TRANSISTOR	1	
QR7501		UN1113	TRANSISTOR-RESISTOR	1	
QR7502		UN1213	TRANSISTOR-RESISTOR	1	
QR7503		UN1112	TRANSISTOR-RESISTOR	1	
			RESISTORS		

Ref.No.		Part No.	Part Name & Description	Pcs	Remarks
R6701		ERDS2TJ154	CARBON 1/4W 150K	1	
R6702		ERDS2TJ100	CARBON 1/4W 10	1	
R7501		ERJ6GMYJ122	CHIP 1/16W 1.2K	1	
R7502		ERJ6GMYJ224	CHIP 1/16W 220K	1	
R7503		ERJ6GMYJ473	CHIP 1/16W 47K	1	
R7504		ERJ6GMYJ473	CHIP 1/16W 47K	1	
R7507		ERJ6GMYJ104	CHIP 1/16W 100K	1	
R7508		ERJ6GMYJ470	CHIP 1/16W 47	1	
R7509		ERJ6GMYJ102	CHIP 1/16W 1K	1	
R7510		ERJ6GMYJ223	CHIP 1/16W 22K	1	
R7511		ERJ6GMYJ473	CHIP 1/16W 47K	1	
R7527		ERJ6GMYJ103	CHIP 1/16W 10K	1	
R7528		ERJ6GMYJ103	CHIP 1/16W 10K	1	
R7529		ERJ6GMYJ103	CHIP 1/16W 10K	1	
R7530		ERJ6GMYJ182	CHIP 1/16W 1.8K	1	
R7531		ERJ6GMYJ182	CHIP 1/16W 1.8K	1	
R7532		ERJ6GMYJ182	CHIP 1/16W 1.8K	1	
R7533		ERJ6GMYJ182	CHIP 1/16W 1.8K	1	
R7534		ERJ6GMYJ182	CHIP 1/16W 1.8K	1	
R7535		ERJ6GMYJ102	CHIP 1/16W 1K	1	
R7536		ERJ6GMYJ103	CHIP 1/16W 10K	1	
R7537		ERJ6GMYJ102	CHIP 1/16W 1K	1	
SW7501		EVQQS307K	SWITCH	1	
SW7502		EVQQS307K	SWITCH	1	
SW7503		EVQQS307K	SWITCH	1	
SW7504		EVQQS307K	SWITCH	1	
SW7505		EVQQS307K	SWITCH	1	
SW7506		EVQQS307K	SWITCH	1	
SW7507		EVQQS307K	SWITCH	1	
SW7508		EVQQS307K	SWITCH	1	
SW7510		EVQQS307K	SWITCH	1	NV-G21EG/EO/EV
SW7511		EVQQS307K	SWITCH	1	
SW7512		EVQQS307K	SWITCH	1	NV-G21EG/EO/EV
SW7513		EVQQS307K	SWITCH	1	
VR6701		EVMLGGA00B15	VARIABLE 100K	1	
X7501		VSX0140A	CRYSTAL OSCILLATOR	1	
X7502		VSX0094A	CRYSTAL OSCILLATOR	1	
			MISCELLANEOUS		
		VJF0398	DISPLAY HOLDER	1	
		VKC0280	HINGE	2	
		VSC1844	IR SHIELD CASE (MAIN)	1	
		VSC1928	IR SHIELD CASE (BOTTOM)	1	
		VSC1929	IR SHIELD BOARD	1	
	■	VEP07395A	CH SELECT C.B.A.		NV-G21EG
	■	VEP07395B	CH SELECT C.B.A.		NV-G21B
	■	VEP07395C	CH SELECT C.B.A.		NV-G21EO/EV
			CAPACITORS		
C7552		ECEA1HK010	ELECTROLYTIC 50V 1U	1	
C7554		ECEA1VK220	ELECTROLYTIC 35V 22U	1	
C7555		ECQB1H273KH	MYLAR 50V 0.027U	1	
C7556		ECQV1H823JZ	MYLAR 50V 0.082U	1	
C7557		ECQV1H683JZ	MYLAR 50V 0.068U	1	
C7558		ECKF1H103ZF	CERAMIC 50V 0.01U	1	

www.freeservicemanuals.info

Ref.No.		Part No.	Part Name & Description	Pcs	Remarks
C7559		ECQV1H104JZ	MYLAR 50V 0.1U	1	
C7560		ECKF1H103ZF	CERAMIC 50V 0.01U	1	
C7561		ECKF1H103ZF	CERAMIC 50V 0.01U	1	
C7563		ECEA1CK100	ELECTROLYTIC 16V 10U	1	
C7564		ECKF1H103ZF	CERAMIC 50V 0.01U	1	
C7565		ECKF1H103ZF	CERAMIC 50V 0.01U	1	
C7566		ECKF1H103ZF	CERAMIC 50V 0.01U	1	
C7567		ECKF1H103ZF	CERAMIC 50V 0.01U	1	NV-G21EG
C7569		ECKF1H103ZF	CERAMIC 50V 0.01U	1	
D7551		MA165	DIODE	1	
D7558		MA165	DIODE	1	
D7559		MA165	DIODE	1	
D7560		MA165	DIODE	1	
IC7551		AN5034	IC	1	NV-G21EG
IC7551		AN5033	IC	1	NV-G21B/EO/EV
IC7552		AN6913	IC	1	
IC7553		MN4066B	IC	1	
P7554		VJP1230T	CONNECTOR(MALE) 3P	1	
P7555		VJP1235T	CONNECTOR(MALE) 8P	1	
P7556		VJP1233T	CONNECTOR(MALE) 6P	1	
P7557		VJP1231T	CONNECTOR(MALE) 4P	1	
QR7551		UN1213	TRANSISTOR-RESISTOR	1	
QR7553		UN1112	TRANSISTOR-RESISTOR	1	NV-G21EG
QR7554		UN1112	TRANSISTOR-RESISTOR	1	NV-G21EG
QR7555		UN1213	TRANSISTOR-RESISTOR	1	NV-G21EG
QR7556		UN1213	TRANSISTOR-RESISTOR	1	
QR7557		UN1213	TRANSISTOR-RESISTOR	1	
QR7558		UN1213	TRANSISTOR-RESISTOR	1	
QR7559		UN1213	TRANSISTOR-RESISTOR	1	
QR7561		UN1213	TRANSISTOR-RESISTOR	1	NV-G21EG
			RESISTORS		
R7551		ERDS2TJ104	CARBON 1/4W 100K	1	
R7554		ERDS2TJ102	CARBON 1/4W 1K	1	
R7555		ERDS2TJ102	CARBON 1/4W 1K	1	
R7556		ERDS2TJ473	CARBON 1/4W 47K	1	
R7557		ERDS2TJ124	CARBON 1/4W 120K	1	
R7558		ERDS2TJ104	CARBON 1/4W 100K	1	
R7559		ERDS2TJ473	CARBON 1/4W 47K	1	
R7560		ERDS2TJ473	CARBON 1/4W 47K	1	
R7561		ERDS2TJ223	CARBON 1/4W 22K	1	
R7562		ERDS2TJ332	CARBON 1/4W 3.3K	1	
R7563		ERDS2TJ332	CARBON 1/4W 3.3K	1	NV-G21EG
R7565		ERDS2TJ102	CARBON 1/4W 1K	1	
R7566		ERDS2TJ334	CARBON 1/4W 330K	1	NV-G21B/EO/EV
R7567		ERDS2TJ104	CARBON 1/4W 100K	1	NV-G21B/EO/EV
R7568		ERDS2TJ103	CARBON 1/4W 10K	1	
R7570		ERDS2TJ103	CARBON 1/4W 10K	1	NV-G21EG/EO/EV
R7570		ERDS2TJ123	CARBON 1/4W 12K	1	NV-G21B
R7580		ERDS2TJ103	CARBON 1/4W 10K	1	
R7581		ERDS2TJ562	CARBON 1/4W 5.6K	1	
R7582		ERDS2TJ682	CARBON 1/4W 6.8K	1	
R7583		ERDS2TJ473	CARBON 1/4W 47K	1	
R7584		ERDS2TJ393	CARBON 1/4W 39K	1	NV-G21EG/EO/EV
R7584		ERDS2TJ333	CARBON 1/4W 33K	1	NV-G21B
R7585		ERDS2TJ473	CARBON 1/4W 47K	1	
R7586		ERDS2TJ563	CARBON 1/4W 56K	1	
R7589		ERDS2TJ332	CARBON 1/4W 3.3K	1	
R7590		ERDS2TJ332	CARBON 1/4W 3.3K	1	
R7599		ERDS2TJ103	CARBON 1/4W 10K	1	NV-G21EG

Ref.No.		Part No.	Part Name & Description	Pcs	Remarks
VR7502		EVND3AA00B14	VARIABLE 10K	1	
	■	VEP01264H	POWER C.B.A.		INCLUDING THE SUB
					POWER C.B.A.
					(VEP00H48A) NV-G21EG
					<!>
	■	VEP01264J	POWER C.B.A.		INCLUDING THE SUB
					POWER C.B.A.
					(VEP00H48A)
					NV-G21B/EO/EV <!>
			CAPACITORS		
C1001		VCK0041	250V 330P	1	<!>
C1002		VCK0041	250V 330P	1	<!>
C1003		VCK0041	250V 330P	1	<!>
C1004		VCK0041	250V 330P	1	<!>
C1005		VCK0045	250V 1500P	1	<!>
C1006		VCK0045	250V 1500P	1	<!>
C1007		VCK0045	250V 1500P	1	<!>
C1008		VCK0045	250V 1500P	1	<!>
C1009		ECQU2A104MN	MYLAR 250V 0.100U	1	<!>
C1010		ECOS2GU101F	ELECTROLYTIC 400V 100U	1	
C1011		ECQE6473MZ	MYLAR 630V 0.047U	1	
C1012		ECEA1CGE470	ELECTROLYTIC 16V 47U	1	
C1013		ECQB1H472KH	MYLAR 50V 4700P	1	
C1014		ECQV1H474JZ	MYLAR 50V 0.47U	1	
C1018		ECEA1HGE470	ELECTROLYTIC 50V 47U	1	
C1019		ECEA1EGE102	ELECTROLYTIC 25V 1000U	1	
C1020		ECEA1EGE102	ELECTROLYTIC 25V 1000U	1	
C1021		ECEA1CGE100	ELECTROLYTIC 16V 10U	1	
C1022		ECEA1HGE470	ELECTROLYTIC 50V 47U	1	
C1023		ECEA1AGE102Z	ELECTROLYTIC 10V 1000U	1	
C1024		ECEA0JFE102X	ELECTROLYTIC 6.3V 1000U	1	
C1025		ECEA1HGE470	ELECTROLYTIC 50V 47U	1	
C1027		ECKD3D151KB	CERAMIC 2KV 150P	1	
C1030		ECKF1H103ZF	CERAMIC 50V 0.01U	1	
C1031		VCK0045	250V 1500P	1	<!>
C1032		VCK0045	250V 1500P	1	<!>
C1033		VCK0041	250V 330P	1	<!>
C1034		VCK0041	250V 330P	1	<!>
C1035		VCK0045	250V 1500P	1	<!>
C1036		VCK0045	250V 1500P	1	<!>
C1037		ECQU2A224MN	MYLAR 250V 0.22U	1	<!>
C1038		VCK0045	250V 1500P	1	<!>
C1039		ECEA1CGE470	ELECTROLYTIC 16V 47U	1	
C1040		ECQP1101JZ	MYLAR 125V 100P	1	
C1041		ECKF1H103ZF	CERAMIC 50V 0.01U	1	
C1042		ECKF1H103ZF	CERAMIC 50V 0.01U	1	
D1001		S1WBA60	DIODE	1	<!>
D1002		ERA22-08	DIODE	1	
D1003		MA178	DIODE	1	
D1004		MA178	DIODE	1	
D1005		MA178	DIODE	1	
D1007		MA185	DIODE	1	
D1008		MA185	DIODE	1	
D1010		ERC30-02L3	DIODE	1	
D1012		MA4130L	DIODE	1	
D1013		MA185	DIODE	1	
D1015		ERA82-004	DIODE	1	
D1016		AK04V2	DIODE	1	
D1019		MA165	DIODE	1	
D1024		MA178	DIODE	1	
D1025		MA178	DIODE	1	
D1026		MA4082H	DIODE	1	

www.freeservicemanuals.info

Ref.No.		Part No.	Part Name & Description	Pcs	Remarks
D1027		ERC30-02L3	DIODE	1	
D1029		ENB461D-05A	SURGE ABSORBER 460V	1	
D1030		MA4082	DIODE	1	
			FUSES		
F1001		XBA2C16TB0	250V 1.6A	1	<!>
F1002		XBA2C25TB0	250V 2.5A	1	<!>
IC1001		STK5338	IC	1	
L1001		ELF18D428	COIL	1	<!>
L1002		ELC07D220	COIL 22U	1	
P1001		VJS1962	CONNECTOR (FEMALE)	1	
Q1001		STR10006C	TRANSISTOR	1	<!>
Q1004		2SD638	TRANSISTOR	1	(Q,R,S)
Q1011		2SB643	TRANSISTOR	1	(Q)
			RESISTORS		
R1002		ERF2AK2R2	WIRE WOUND 2W 2.2	1	<!>
R1003		ERDS2TJ474	CARBON 1/4W 470K	1	
R1004		ERDS2TJ474	CARBON 1/4W 470K	1	
R1005		ERDS2TJ474	CARBON 1/4W 470K	1	
R1006		ERDS2TJ474	CARBON 1/4W 470K	1	
R1007		ERG2ANJ683	METAL OXIDE 2W 68K	1	
R1008		ERW2PKR39	WIRE WOUND 2W 0.39	1	
R1009		ERG1SJ181	METAL OXIDE 1W 180	1	
R1012		ERQ12HJ6R8P	FUSE 1/2W 6.8	1	<!>
R1014		ERD2FCJ4R7	CARBON 2W 4.7	1	
R1015		ERQ12HJ1R0P	FUSE 1/2W 1	1	<!>
R1016		ERQ12HJ6R8P	FUSE 1/2W 6.8	1	<!>
R1017		ERG12ANJ182	METAL OXIDE 1/2W 1800	1	
R1025		ERDS2TJ562	CARBON 1/4W 5.6K	1	
R1028		ERDS2TJ271	CARBON 1/4W 270	1	
T1001		VLT0325	TRANSFORMER	1	<!>
			MISCELLANEOUS		
		VJS1972	INLET (MALE)	1	<!>
		VSC1831	SHIELD PLATE	1	
		VJF0381	FUSE HOLDER	4	<!>
	■	VEP07368C	VPS C.B.A.		NV-G21EG/EV
			CAPACITORS		
C7801		ECEA1CK220	ELECTROLYTIC 16V 22U	1	
C7802		ECQB1H223JH	MYLAR 50V 0.022U	1	
C7803		ECQV1H683JZ	MYLAR 50V 0.068U	1	
C7804		ECEA1HKNR47	ELECTROLYTIC 50V 0.47U	1	
C7805		ECCF1H150JC	CERAMIC 50V 15P	1	
C7806		ECQB1H102JH	MYLAR 50V 1000P	1	
C7807		ECKF1H471KB	CERAMIC 50V 470P	1	

Ref.No.		Part No.	Part Name & Description	Pcs	Remarks
C7808		ECQB1H223JH	MYLAR 50V 0.022U	1	
C7809		ECKF1H271KB	CERAMIC 50V 270P	1	
C7810		ECCF1H101JC	CERAMIC 50V 100P	1	
C7811		ECCF1H180JC	CERAMIC 50V 18P	1	
C7812		ECCF1H820JC	CERAMIC 50V 82P	1	
C7814		ECKF1H102KB	CERAMIC 50V 1000P	1	
C7815		VCYD1C104MR1	SEMICONDUCTOR 16V 0.1U	1	
C7816		ECEA1EK4R7	ELECTROLYTIC 25V 4.7U	1	
C7818		ECEA1CKN100	ELECTROLYTIC 16V 10U	1	
C7819		ECCF1H101JC	CERAMIC 50V 100P	1	
C7820		ECCF1H101JC	CERAMIC 50V 100P	1	
C7821		ECQB1H272JH	MYLAR 50V 2700P	1	
C7851		ECQV1H104JZ	MYLAR 50V 0.1U	1	
C7852		ECEA1AK101	ELECTROLYTIC 10V 100U	1	
C7853		ECCF1H330JC	CERAMIC 50V 33P	1	
C7854		ECCF1H330JC	CERAMIC 50V 33P	1	
C7855		ECEA1HK010	ELECTROLYTIC 50V 1U	1	
C7856		ECEA1HK010	ELECTROLYTIC 50V 1U	1	
			DIODES		
D7851		MA165	DIODE	1	
			INTEGRATED CIRCUITS		
IC7801		SAA5235	IC	1	
IC7802		SAF1135P	IC	1	
IC7851		MN15834VEQ	IC	1	
IC7852		MN1280T	DIODE	1	
			COILS		
L7801		VLQ0193	COIL	1	
L7802		VLQEL05F101K	COIL 100UH	1	
L7803		VLQEL05F101K	COIL 100UH	1	
			CONNECTORS		
P7801		VJP1234T	CONNECTOR(MALE) 7P	1	
P7802		VJP1231T	CONNECTOR(MALE) 4P	1	
			TRANSISTORS		
Q7801		2SD636	TRANSISTOR	1	
Q7802		2SB641	TRANSISTOR	1	
Q7803		2SB641	TRANSISTOR	1	
			COMBINATION PARTS		
			(TRANSISTOR & RESISTORS)		
QR7851		UN1211	TRANSISTOR-RESISTOR	1	
QR7852		UN1213	TRANSISTOR-RESISTOR	1	
			RESISTORS		
R7803		ERDS2TJ103	CARBON 1/4W 10K	1	
R7804		ERDS2TJ103	CARBON 1/4W 10K	1	
R7809		ERDS2TJ683	CARBON 1/4W 68K	1	
R7810		ERDS2TJ223	CARBON 1/4W 22K	1	
R7811		ERDS2TJ332	CARBON 1/4W 3.3K	1	
R7812		ERDS2TJ152	CARBON 1/4W 1.5K	1	
R7813		ERDS2TJ102	CARBON 1/4W 1K	1	
R7814		ERDS2TJ102	CARBON 1/4W 1K	1	
R7815		ERDS2TJ102	CARBON 1/4W 1K	1	
R7816		ERDS2TJ472	CARBON 1/4W 4.7K	1	
R7817		ERDS2TJ103	CARBON 1/4W 10K	1	
R7818		ERDS2TJ221	CARBON 1/4W 220	1	
R7851		ERDS2TJ103	CARBON 1/4W 10K	1	

www.freeservicemanuals.info

Ref.No.		Part No.	Part Name & Description	Pcs	Remarks
X7801		VSX0173	CRYSTAL OSCILLATOR	1	
X7851		EF0A4R0M03C2	CRYSTAL OSCILLATOR	1	
	■	ENC87956	RF CONVERTER & ANTENA		NV-G21EG<!>
	■	ENC87952	BOOSTER UNIT		NV-G21B<!>
		ENC87954			NV-G21EO/EV<!>
			INTEGRATED CIRCUIT		
IC1		LA7051	IC	1	
			TRANSISTORS		
Q1		2SC2570A	TRANSISTOR	1	OR 2SC3355
Q2		2SC3130	TRANSISTOR	1	
			DIODES		
D1		MA1075	ZENER	1	
D2		HSM276S		1	
D3		MA166		1	
D4		MA166		1	NV-G21B
D5		MA166		1	
			NOTE:		
			THE OTHER PARTS FOR		
			RF CONVERTER & ANTENA		
			BOOSTER UNIT ARE		
			NOT AVAILABLE AS SPARE		
			PARTS.		
	■	VEP22066A	PROGRAMMABLE REMOTE		
			CONTROL UNIT C.B.A		
			CAPACITORS		
C1		ECEA0GKS101	ELECTROLYTIC 4V 100U	1	
C2		ECKF1H121KB	CERAMIC 50V 120P	1	
C3		ECKF1H121KB	CERAMIC 50V 120P	1	
C4		ECQB1H222KZ	MYLAR 50V 2200P	1	
			DIODES		
D1		SE303AY	DIODE	1	
D4		MA165	DIODE	1	
D5		MA165	DIODE	1	
D6		MA165	DIODE	1	
D7		MA165	DIODE	1	
D8		MA165	DIODE	1	
D9		MA165	DIODE	1	
			INTEGRATED CIRCUIT		
IC1		MN6011D	IC	1	

Ref.No.		Part No.	Part Name & Description	Pcs	Remarks
			COMBINATION PART		
			(TRANSISTOR & RESISTORS)		
QR1		UN1231	TRANSISTOR - RESISTORS	1	
			RESISTOR		
R1		ERDS2TJ1R0	CARBON 1/4W 1.0	1	
			CRYSTAL OSCILLATOR		
X1		VSX0201	CRYSTAL OSCILLATOR	1	
	■	VEP66019D	DIGITAL SCANNER C.B.A.		NV-G21EG/EO/EV
		VEP66019E			NV-G21B
			CAPACITORS		
C01		ECEA0JK470I	ELECTROLYTIC 6.3V 47U	1	
C02		ECEA1HKN010I	ELECTROLYTIC 50V 1U	1	
C03		ECUX1E104ZFM	CHIP 25V 0.1U	1	
C04		ECUX1E104ZFM	CHIP 25V 0.1U	1	
C05		ECEA1HK010I	ELECTROLYTIC 50V 1U	1	
C06		ECEA1AKA470I	ELECTROLYTIC 10V 47U	1	
C07		ECUX1H330JCN	CHIP 50V 33P	1	
C08		ECUX1H330JCN	CHIP 50V 33P	1	
C09		ECUX1H103ZFN	CHIP 50V 0.01U	1	
D01		MA151WK	DIODE	1	
D02		MA151WK	DIODE	1	
D03		MA151WK	DIODE	1	
D04		MA151WK	DIODE	1	
D05		MA153	DIODE	1	
D06		SE303AY	DIODE	1	
IC01		UPD49HG88022	IC	1	NV-G21EG/EO/EV
IC01		UPD49HG87922	IC	1	NV-G21B
IC02		UPC324G2-T2	IC	1	
IC03		NJM78L02AA	IC	1	
L01		ELT3K017A	COIL	1	NV-G21EG/EO/EV
L01		ELT3K014C	COIL	1	NV-G21B
P01		VJP1229T	CONNECTOR(MALE) 2P	1	
Q01		2SB710	TRANSISTOR CHIP	1	(Q,R,S)
Q02		2SB710	TRANSISTOR CHIP	1	(Q,R,S)
Q03		2SB709	TRANSISTOR CHIP	1	(Q,R,S)
Q04		2SD601	TRANSISTOR CHIP	1	(Q,R,S)
			RESISTORS		
R01		ERJ6GMYJ470	CHIP 1/16W 47	1	
R02		ERJ6GMYJ102	CHIP 1/16W 1K	1	
R03		ERJ6GMYJ123	CHIP 1/16W 12K	1	
R04		ERJ6GMYJ332	CHIP 1/16W 3.3K	1	
R05		ERJ6GMYJ202	CHIP 1/16W 2K	1	

www.freeservicemanuals.info

Ref.No.		Part No.	Part Name & Description	Pcs	Remarks
R06		ERJ6GMYJ244	CHIP 1/16W 240K	1	
R07		ERJ6GMYJ162	CHIP 1/16W 1.6K	1	
R10		ERJ8GCYK106	CHIP 1/8W 10M	1	
R11		ERJ6GMYJ105	CHIP 1/16W 1M	1	
R12		ERJ8GCYK106	CHIP 1/8W 10M	1	
R13		ERJ6GMYJ361	CHIP 1/16W 360	1	
R14		ERJ6GMYJ682	CHIP 1/16W 6.8K	1	
R15		ERJ6GMYJ332	CHIP 1/16W 3.3K	1	
R16		ERJ6GMYJ682	CHIP 1/16W 6.8K	1	
R17		ERJ6GMYJ682	CHIP 1/16W 6.8K	1	
R18		ERDS2EJ6R8	CARBON 1/4W 6.8	1	
R20		ERJ6GMYJ104	CHIP 1/16W 100K	1	
R23		ERJ6GMYJ682	CHIP 1/16W 6.8K	1	
R24		ERJ6GMYJ102	CHIP 1/16W 1K	1	
SW01		VSS0211	SWITCH	1	
SW02		VSP0221	SWITCH	1	
X01		VSX0199	CRYSTAL OSCILLATOR	1	
X02		VSQ0552	BUZZER	1	
	■	VEP00H22A	CYLINDER DRIVE C.B.A		
			CAPACITORS		
C2901		ECEA1VSN2R2	ELECTROLYTIC 35V 2.2U	1	
C2902		ECEA1VSN2R2	ELECTROLYTIC 35V 2.2U	1	
C2903		ECEA1VSN2R2	ELECTROLYTIC 35V 2.2U	1	
C2904		ECEA1HKSR22	ELECTROLYTIC 50V 22U	1	
C2905		ECEA1HKSR22	ELECTROLYTIC 50V 22U	1	
C2906		ECEA1HKSR22	ELECTROLYTIC 50V 22U	1	
C2907		ECEA1HKSR33	ELECTROLYTIC 50V 33U	1	
C2908		ECQV1H473	MYLAR 50V 0.047U	1	
C2909		ECQV1H104JZ	MYLAR 50V 0.1U	1	
C2910		ECEA1CKS100	ELECTROLYTIC 16V 10U	1	
			INTEGRATED CIRCUIT		
IC2901		AN3812K	IC	1	
			RESISTOR		
R2901		ERX12ANJR68	METAL OXIDE 1/4W 0.68	1	
			CONNECTORS		
P2901		VJP1232		1	
P2902		VJP1927		1	
			MISCELLANEOUS		
		VSC1843	SINK HEAT	1	
		VMA6884	MAIN HOLDER	1	
	■	VEP00H30A	MECHANISM CONNECTION C.B.A. CONNECTORS		

Ref.No.		Part No.	Part Name & Description	Pcs	Remarks
			CONNECTORS		
P1504		VJP1939	12P	1	
P1505		VJP1242T	2P	1	
			RESISTORS		
R1501		ERDS2TJ223	CARBON 1/4W 22K	1	
	■	VEP00H31A	REEL SENSOR C.B.A. PHOTO TRANSISTOR		
			INTEGRATED CIRCUITS		
IC1501		ON2170		1	
			CONNECTOR		
P1506		VJP1242	2P	1	
	■	VXA2689	LED C.B.A. UNIT		
			DIODES		
D1501		GL450	PHOTO DIODE	1	
			MISELLANEOUS		
		VMD0911	LED HOLDER	1	
		VWJ0254	FLEXISIBLE C.B	1	
	■	VEP00H34A	TAKEUP PHOTO Tr C.B.A.		
			CAPACITORS		
C1502		ECKW1H102KBN	CERAMIC 50V 1000P	1	
			RESISTORS		
R1503		ERDS2TJ222	CARBON 1/4W 2.2K	1	
			CONNECTORS		
P1503		VJS1936		1	
P1508		VJP1242T		1	
			TRANSISTOR		
Q1502		PN150NV	PHOTO TRANSISTOR	1	
			MISCELLANEOUS		
		VMD0645	PHOTO TR HOLDER	1	

www.freeservicemanuals.info

Ref.No.		Part No.	Part Name & Description	Pcs	Remarks
	■	VEP00H35A	SUPPLY PHOTO Tr C.B.A.		
			CAPACITOR		
C1501		ECKW1H102KBN	CERAMIC 50V 1000P	1	
			TRANSISTOR		
Q1501		PN150NV	PHOTO TRANSISTOR	1	
			MISCELLANEOUS		
		VMD0645	PHOTO TR HOLDER	1	

Ref.No.		Part No.	Part Name & Description	Pcs	Remarks

www.freeservicemanuals.info

3. VW-VPS1

Note: 1. * Be sure to make your orders of replacement parts according to this list.
2. IMPORTANT SAFETY NOTICE
Components identified with the mark ⟨!⟩ have the special characteristics for safety. When replacing any of these components, use only the same type.
3. Unless otherwise specified,
All resistors are in OHMS, K=1,000 OHMS. All capacitors are in MICRO-FARADS(uf), P=uuF.
4. The P.C.Board units marked width'■'show below the main assembled parts.

Ref.No.		Part No.	Part Name & Description	Pcs	Remarks
	■	VEP07368B	VPS C.B.A.		
			CAPACITORS		
C7801		ECEA1CK220	ELECTROLYTIC 16V 22U	1	
C7802		ECQB1H223JH	MYLAR 50V 0.022U	1	
C7803		ECQV1H683JZ	MYLAR 50V 0.068U	1	
C7804		ECEA1HKNR47	ELECTROLYTIC 50V 0.47U	1	
C7805		ECCF1H150JC	CERAMIC 50V 15P	1	
C7806		ECQB1H102JH	MYLAR 50V 1000P	1	
C7807		ECKF1H471KB	CERAMIC 50V 470P	1	
C7808		ECQB1H223JH	MYLAR 50V 0.022U	1	
C7809		ECKF1H271KB	CERAMIC 50V 270P	1	
C7810		ECCF1H101JC	CERAMIC 50V 100P	1	
C7811		ECCF1H180JC	CERAMIC 50V 18P	1	
C7812		ECCF1H820JC	CERAMIC 50V 82P	1	
C7814		ECKF1H102KB	CERAMIC 50V 1000P	1	
C7815		VCYD1C104MR1	SEMICONDUCTOR 16V 0.1U	1	
C7816		ECEA1EK4R7	ELECTROLYTIC 25V 4.7U	1	
C7818		ECEA1CKN100	ELECTROLYTIC 16V 10U	1	
C7819		ECCF1H101JC	CERAMIC 50V 100P	1	
C7820		ECCF1H101JC	CERAMIC 50V 100P	1	
C7821		ECQB1H272JH	MYLAR 50V 2700P	1	
C7851		ECQV1H104JZ	MYLAR 50V 0.1U	1	
C7852		ECEA1AK101	ELECTROLYTIC 10V 100U	1	
C7853		ECCF1H330JC	CERAMIC 50V 33P	1	
C7854		ECCF1H330JC	CERAMIC 50V 33P	1	
C7855		ECEA1HK010	ELECTROLYTIC 50V 1U	1	
C7856		ECEA1HK010	ELECTROLYTIC 50V 1U	1	
			DIODES		
D7851		MA165	DIODE	1	
			INTEGRATED CIRCUITS		
IC7801		SAA5235	IC	1	
IC7802		SAF1135P	IC	1	
IC7851		MN15834VEQ	IC	1	
IC7852		MN1280T	DIODE	1	
			COILS		
L7801		VLQ0193	COIL	1	
L7802		VLQEL05F101K	COIL 100UH	1	
L7803		VLQEL05F101K	COIL 100UH	1	
			CONNECTORS		
P7801		VJP1234T	CONNECTOR(MALE) 7P	1	
P7802		VJP1231T	CONNECTOR(MALE) 4P	1	
			TRANSISTORS		
Q7801		2SD636	TRANSISTOR	1	
Q7802		2SB641	TRANSISTOR	1	
Q7803		2SB641	TRANSISTOR	1	
			COMBINATION PARTS		
			(TRANSISTOR & RESISTORS)		

Ref.No.		Part No.	Part Name & Description	Pcs	Remarks
QR7851		UN1211	TRANSISTOR-RESISTOR	1	
QR7852		UN1213	TRANSISTOR-RESISTOR	1	
			RESISTORS		
R7803		ERDS2TJ103	CARBON 1/4W 10K	1	
R7804		ERDS2TJ103	CARBON 1/4W 10K	1	
R7809		ERDS2TJ683	CARBON 1/4W 68K	1	
R7810		ERDS2TJ223	CARBON 1/4W 22K	1	
R7811		ERDS2TJ332	CARBON 1/4W 3.3K	1	
R7812		ERDS2TJ152	CARBON 1/4W 1.5K	1	
R7813		ERDS2TJ102	CARBON 1/4W 1K	1	
R7814		ERDS2TJ102	CARBON 1/4W 1K	1	
R7815		ERDS2TJ102	CARBON 1/4W 1K	1	
R7816		ERDS2TJ472	CARBON 1/4W 4.7K	1	
R7817		ERDS2TJ103	CARBON 1/4W 10K	1	
R7818		ERDS2TJ221	CARBON 1/4W 220	1	
R7851		ERDS2TJ103	CARBON 1/4W 10K	1	
X7801		VSX0173	CRYSTAL OSCILLATOR	1	
X7851		EFOA4ROMO3C2	CRYSTAL OSCILLATOR	1	

www.freeservicemanuals.info

www.freeservicemanuals.info

www.freeservicemanuals.info

Panasonic

MATSUSHITA ELECTRIC

Printed in Japan